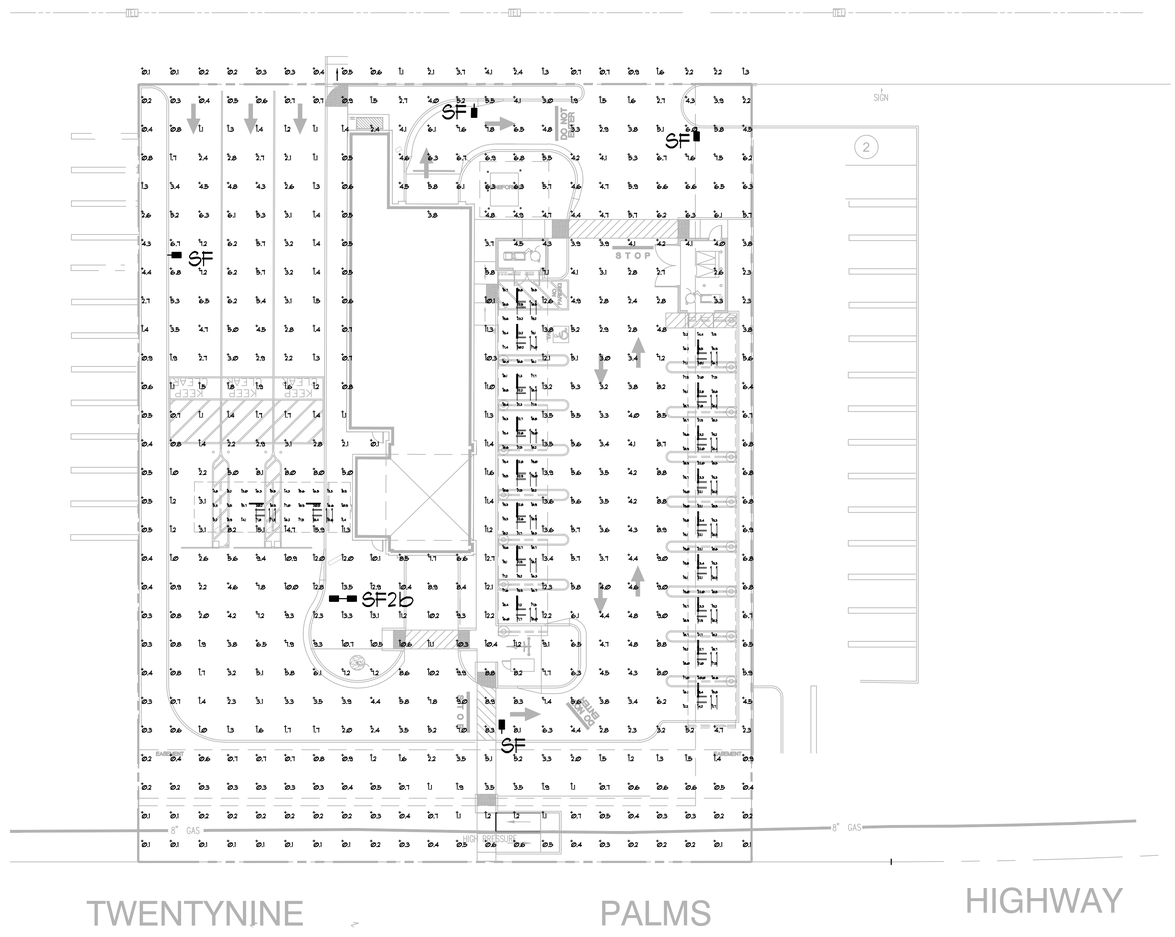

ELECTRICAL SITE LIGHTING PLAN

SCALE: 1"-20'-0"

A
ES1.1

E:\Shared Drives\Jobs 2022-23\22\22468\E\planning\ES1.1.dwg
2022/07/19 12:42 PM By: Chris

ORIGINAL SHEET - ARCH D

Stantec

Architecture Inc.
3133 West Frye Road, Suite 300
Chandler, AZ. 85226-5110
TEL. 480.687.6100
www.stantec.com

The Contractor shall verify and be responsible for all dimensions. DO NOT scale the drawing - any errors or omissions shall be reported to Stantec without delay.
The Copyrights to all designs and drawings are the property of Stantec. Reproduction or use for any purpose other than that authorized by Stantec is forbidden.

Revision	By	Appd.	YY.MM.DD	Issued	By	Appd.	YY.MM.DD

Quick Quack CAR WASH

Client/Project
QUICK QUACK CARWASH #43-040
58024 TWENTYNINE PALMS HWY.
YUCCA VALLEY, CA. 92284

Title
ELECTRICAL SITE LIGHTING PLAN

Permit-Seal

REGISTERED PROFESSIONAL ENGINEER
No. E-10629
EXP. 6-30-2023
ELECTRICAL
STATE OF CALIFORNIA

SACRAMENTO ENGINEERING CONSULTANTS
10555 Old Placerville Road
Sacramento, CA 95827-2503
Phone: (916) 368-4468
Fax: (916)368-4490
www.saceng.com
Job No. 22468

Date Signed: 7/19/2022

Project Number: 2007130200

File Name:

Dwn.	Chkd.	Dsgn.	YY.MM.DD

Drawing No.

Revision Sheet

ES1.1 of

LIGHTING FIXTURE SCHEDULE

SYMBOL OR TAG LETTER	MANUF.	CATALOG NUMBER	LAMP DATA NO.	LAMP DATA TYPE	WATTS	MOUNTING	DESCRIPTION
F1	SECURITY LTG	SLED-HE-24-DO-U-PS-5K	LED	LED	10	BRACKET ON WALL	2' LINEAR FLOOD. WALLWASH FLOODLIGHT WITH MOUNTING ARM. BRONZE FINISH. MOUNT AT TOP OF PIER COLUMN AIMED DOWN, BRONZE FINISH.
F10	CREE	XSPW-B-WM-3ME-2L-57K-UL-XX'	LED	LED	19	WALL	WALL PACK, 8' MTG HT. BZ- BRONZE, 120-277V
F11	CREE	VT320H4UNV50K	LED	LED	43	SURFACE	4' WET LOCATION LINEAR W/ STAINLESS LATCHES. PAY CANOPY, VACUUM CANOPY. 6700 LUMEN
LFL4	SECURITY LTG	SLED-HE-48-DO-U-PS-5K	LED	LED	17	SURFACE	4' LINEAR FACADE LIGHT. DOWNLIGHT ONLY. SILVER FINISH. REFER TO EXTERIOR ELEVATIONS FOR MOUNTING HEIGHT
LFL8	SECURITY LTG	SLED-HE-96-DO-U-PS-5K	LED	LED	34	SURFACE	8' LINEAR FACADE LIGHT. DOWNLIGHT ONLY. SILVER FINISH. REFER TO EXTERIOR ELEVATIONS FOR MOUNTING HEIGHT
SF	LSI	MRS-LED-18L-SIL-FT-50-70CRI-SINGLE-16'POLE, 24" BASE	LED	LED	135	POLE	SINGLE POLE LIGHT FIXTURE, DIRECT ARM MOUNT. BRONZE FINISH
SF2b	LSI	MRS-LED-18L-SIL-FT-50-70CRI-D180-16'POLE, 24" BASE	LED	LED	270	POLE	(2) HEAD POLE LIGHT FIXTURE, DIRECT ARM MOUNT. BRONZE FINISH
T1	LSI	XWS-LED-2L-FTW-UNV-DIM-50-80CRI-MSV	LED	LED	15	WALL	RADIAL SCONCE, DOWNLIGHT ONLY, (WINDOW CANOPY/TRELLIS) 120-277V.

ALL EXTERIOR LIGHT FIXTURES TO HAVE A BRONZE FINISH

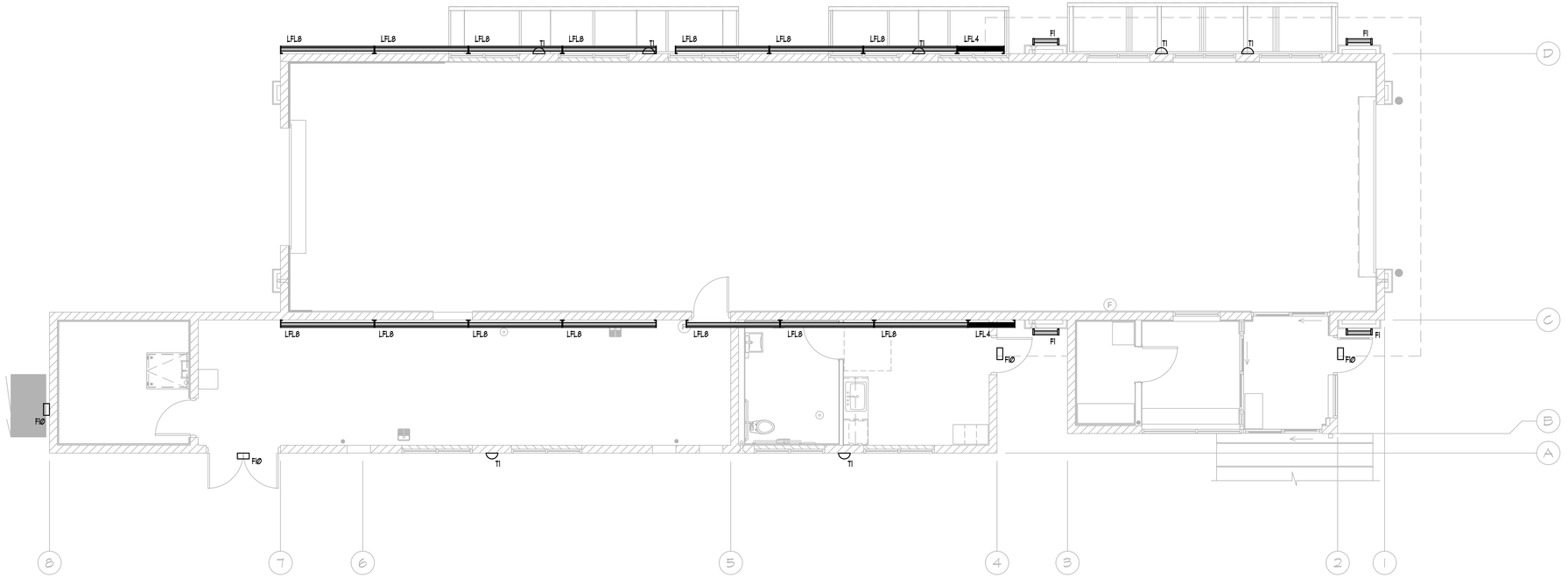

BUILDING EXTERIOR LIGHTING PLAN

SCALE: 3/16"=1'-0"

A
ES1.2

Stantec
Architecture Inc.
3133 West Frye Road, Suite 300
Chandler, AZ. 85226-5110
TEL. 480.687.6100
www.stantec.com

The Contractor shall verify and be responsible for all dimensions. DO NOT scale the drawing - any errors or omissions shall be reported to Stantec without delay.
The Copyrights to all designs and drawings are the property of Stantec. Reproduction or use for any purpose other than that authorized by Stantec is forbidden.

Revision	By	Appd.	YY.MM.DD	Issued	By	Appd.	YY.MM.DD

Quick Quack CAR WASH

Client/Project
QUICK QUACK CARWASH #43-040
58024 TWENTYNINE PALMS HWY.
YUCCA VALLEY, CA. 92284

Title
BUILDING EXTERIOR LIGHTING PLAN

Permit-Seal

REGISTERED PROFESSIONAL ENGINEER
No. E-10629
EXP. 6-30-2023
STATE OF CALIFORNIA

SACRAMENTO ENGINEERING CONSULTANTS
10555 Old Placerville Road
Sacramento, CA 95827-2503
Phone: (916) 368-4468
Fax: (916)368-4490
www.saceng.com

Job No. 22468

Date Signed: 7/19/2022

Project Number: 2007130200

File Name:

Dwn.	Chkd.	Dsgn.	YY.MM.DD

Drawing No.

Revision Sheet

ES1.2 of

E:\Shared Drives\Jobs 2022-23\22\22468\E\planning\ES1.2.dwg
2022/07/19 12:42 PM By: Chris

ORIGINAL SHEET - ARCH D

SECURITY LIGHTING™

DATE: | LOCATION:
TYPE: SLED2/F1 | PROJECT: Quick Quack
CATALOG #: SLED-HE-24-DO-U-PS-5K

SLED

HIGH EFFICIENCY LINEAR LED FACADE FIXTURE

FEATURES

- The SLED Linear LED Lighting System offers a discrete and minimalist design to maximize the lighting effect for marketing your building as your brand while keeping energy usage and maintenance to a minimum.
- Thanks to its intuitive "plug and play" mounting design with integral driver system, installation is quick and simple and only requires that power be brought to one fixture in each continuous row.
- The unique fixture design and the long life Mid-Power LED source minimizes maintenance to only an occasional cleaning of outer lens surfaces.
- This successful system is truly a "set it and forget it" solution that is only offered from Security Lighting

SPECIFICATIONS

CONSTRUCTION
- Powder-coated mounting brackets that conceal power cables
- Fixture to fixture connections are made external to the fixture

OPTICS
- 5000K color temp standard
- Tempered glass lens
- Down only full cut off

INSTALLATION
- Each order ships with a formed drilling template for accurate and quick installation
- All subsequent fixtures quickly plug together in series
- Fixtures are not opened during the installation process
- Complete instructions for fixture installation posted on web site at www.secuirtylighting.com

ELECTRICAL
- Fully integrated driver for completely self-contained lighting system
- Power feed required only at beginning of each continuous row or stand alone fixture

WARRANTY
- 5 year warranty
- See HLI Standard Warranty for additional information

ORDERING GUIDE

Example: S-LED-XX-DO-U-XX-XX

CATALOG # SLED-HE-24-DO-U-PS-5K

S	LED	HE	24	DO	U	PS	5K
Series	Source	Type	Size	Distribution	Voltage	Finish	Options
S Linear Facade Fixture	LED Mid-Powered	HE High Efficiency	48 4-foot	DO Downlight Only (8.5 Watts per foot)	U Universal 120 to 277 Volt	PS Platinum Silver	3K 3000K color temp[5]
			36 3-foot			DB Dark Bronze	4K 4000K color temp[5]
			24 2-foot			WH White	
						BK Black	
						IO Iron Ore	
						RL RAL Color[1,4]	

Notes:
1 Must Provide RAL color number and powder coat manufacture name at time of quote request
2 Color paint chip would need to be provided at time of quote request
3 Must only use factory supplied whip kit to maintain water tight integrity and product warranty
4 Made to order, 4 to 8 week lead time
5 5000K color temperature standard
Optional 3000K and 4000K color temp, built to order

✓

KEY DATA	
Lumens	834 / 1211
Wattage	30
Efficacy (LPW)	83.6 / 82.9
Reported Life (Hours)	L70 >120,000
Input Current Range (Amps)	.036 - 0.12

© 2020 Security Lighting, a division of Hubbell Lighting, Inc. Specifications subject to change without notice.
2100 Golf Road, Suite 460 • Rolling Meadows, IL 60008-4704 / Tel 1.800.LIGHT IT, 1.800.544.4848
Fax 847.279.0642 Website www.securitylighting.com
HUBBELL Lighting

Catalog #: XWS LED 2L FTW UNV DIM 50 80CRI MSV | Project: Quick Quack
Prepared By: | Date: | Type: F10

Mirada Small Wall Sconce (XWS)

Outdoor LED Wall Light

IP65 IK10

OVERVIEW	
Lumen Output Range	2,000 - 6,000
Wattage Range	15 - 52
Efficacy Range (LPW)	119 - 151
Luminaire Weight lbs (kg)	8 (3.6)

QUICK LINKS

Ordering Guide | Performance | Photometrics | Dimensions

FEATURES & SPECIFICATIONS

Construction
- Rugged die-cast aluminum housing.
- Fixtures are finished with LSI's DuraGrip® polyester powder coat finishing process. The DuraGrip finish withstands extreme weather changes without cracking or peeling. Other standard LSI finishes available. Consult factory.
- Extended housing available with 1/2" threaded hubs for surface conduit and rated wire.
- Standard luminaire shipping weight: 10 lbs in carton.
- Max luminaire shipping weight (with back housing): 20 lbs in carton.

Optical System
- Choice of acrylic lens or high impact resistant polycarbonate lens
- The lens is fully gasketed with a one-piece solid silicone gasket to keep out moisture and dust, providing an IP65 rating for the luminaire
- Reflector system with recessed light engine reduces glare and brightness.
- Forward Throw Wide and Medium distributions available.
- Optional diffused lens for reduced LED pixilation over the lens and maximum visual comfort.
- Zero uplight.
- Available in 5000K, 4000K, 3500K, 3000K and 2700K color temperatures per ANSI C78.377.
- Minimum CRI of 80

Electrical
- High-performance driver features over-voltage under-voltage, short-circuit and over temperature protection.
- 0-10V dimming (10% - 100%) standard.
- Standard Universal Voltage (120-277 VAC) Input 50/60 Hz or optional High Voltage (347-480 VAC).
- L70 Calculated Life: >60k Hours
- Total harmonic distortion: <20%
- Operating temperature: -40°C to +50°C (-40°F to +122°F).
- Power factor: >.90
- Input power stays constant over life.
- Optional 10kV surge protection device meets a minimum Category C Low operation (per ANSI/IEEE C62.41.2).
- High-efficacy LEDs mounted to metal-core circuit board to maximize heat dissipation
- Driver is fully encased in potting material for moisture resistance. Driver complies with FCC standards. Accessible driver and electrical components.
- Optional Dual Drivers/Circuit/Power Feeds.
- Optional battery backup provides 90-minutes of constant power to the LED system, ensuring code compliance. A test switch/indicator button is installed on the housing for ease of maintenance. Standard battery rated for 0° to 50° with cold weather battery rated for -20°C to 50°. 120-277V Only.

Controls
- Optional integral passive infrared Bluetooth™ motion and photocell sensor. Fixtures operate independently and can be commissioned via iOS or Android configuration app.
- LSI's AirLink™ wireless control system options reduce energy and maintenance costs while optimizing light quality 24/7.

Installation
- Universal wall mounting plate mounts directly to vertical surface or 4" junction box (octagonal or square).
- Luminaire hinges to the top of the mounting plate and is secured via two flush mount screws that help to conceal the hardware and prevent over tightening during installation.

Warranty
- LSI luminaires carry a 5-year limited warranty. Refer to https://www.lsicorp.com/resources/terms-conditions-warranty/ for more information.

Listings
- Listed to UL 1598 and UL 8750.
- Meets Buy American Act requirements.
- IDA compliant; with 2700K or 3000K color temperature selection.
- Title 24 Compliant; see local ordinance for qualification information.
- Suitable for wet locations.
- IP65 rated luminaire per IEC 60598-1.
- IK10 rated luminiare per IEC 66262 mechanical impact code with clear polycarbonate lens (MTP).
- DesignLights Consortium® (DLC) qualified product. Not all versions of this product are DLC qualified. Please check the DLC Qualified Products List at www.designlights.org/QPL to confirm which versions are qualified.

LSI Industries Inc. 10000 Alliance Rd. Cincinnati, OH 45242 • www.lsicorp.com
(513) 372-3200 • ©2020 LSI Industries Inc. All Rights Reserved. Specifications subject to change without notice.

VT3-20

LED Vaportite

Project
Catalog
Type F11
Type
Date

Product Description

The VT3-20 LED Linear Vaportite is designed to give long lasting, energy efficient light in demanding locations. This IP65 rated fixture is dust and water tight and replaces legacy fluorescent strip lights in car wash operations, garages, maintenance facilities, canopies, locker rooms and stairwells.

Construction
- Fully gasketed polycarbonate housing
- Ten captive stainless steel latches ensure a water tight seal
- Eight drill through knockouts available (6 on back, 1 on each end)

Optical System
- UV stabilized, frosted polycarbonate diffuser
- Wrapped lens provides 5% uplight
- 80+ CRI

Electrical
- High efficacy using latest generation mid-power LED's
- Universal input 120-277VAC, THD <20%, power factor >0.9
- Dimmable to 10% via 0-10VDC dimming
- TM-21 Projected L70(9k) life >100,000 hours
- LM-79, LM-80 testing performed in accordance with IESNA standards

Finish
- Light grey, gloss polycarbonate body with frosted lens

Installation
- Toolless surface mount installation via spring steel clips
- Clips contain mounting hook for cable suspension
- Can be surface mounted to walls and ceilings for application variability
- Operating temperature rating of -40°F to 104°F (-40°C to 40°C)
- For installations where power suge may be possible, NICOR recommends installing additional surge protection at the electrical distribution panel

Warranty
- 5-year limited system warranty standard
- Warranty does not cover product failure due to an overvoltage event (power surge)

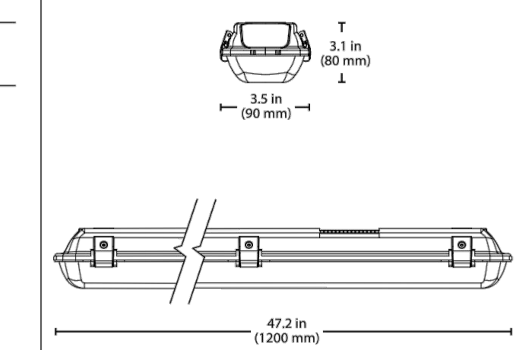

WET LOCATION RATED | 5 YEAR WARRANTY | IP65

SECURITY LIGHTING™

DATE: | LOCATION:
TYPE: SLED8/LFL8 SLED4/LFL4 | PROJECT: Quick Quack
CATALOG #: SLED-HE-48-DO-U-PS-5K

SLED

HIGH EFFICIENCY LINEAR LED FACADE FIXTURE

FEATURES

- The SLED Linear LED Lighting System offers a discrete and minimalist design to maximize the lighting effect for marketing your building as your brand while keeping energy usage and maintenance to a minimum.
- Thanks to its intuitive "plug and play" mounting design with integral driver system, installation is quick and simple and only requires that power be brought to one fixture in each continuous row.
- The unique fixture design and the long life Mid-Power LED source minimizes maintenance to only an occasional cleaning of outer lens surfaces.
- This successful system is truly a "set it and forget it" solution that is only offered from Security Lighting

SPECIFICATIONS

CONSTRUCTION
- Powder-coated mounting brackets that conceal power cables
- Fixture to fixture connections are made external to the fixture

OPTICS
- 5000K color temp standard
- Tempered glass lens
- Down only full cut off

INSTALLATION
- Each order ships with a formed drilling template for accurate and quick installation
- All subsequent fixtures quickly plug together in series
- Fixtures are not opened during the installation process
- Complete instructions for fixture installation posted on web site at www.secuirtylighting.com

ELECTRICAL
- Fully integrated driver for completely self-contained lighting system
- Power feed required only at beginning of each continuous row or stand alone fixture

WARRANTY
- 5 year warranty
- See HLI Standard Warranty for additional information

ORDERING GUIDE

Example: S-LED-XX-DO-U-XX-XX

CATALOG # SLED-HE-48-DO-U-PS-5K

S	LED	HE	48	DO	U	PS	5K
Series	Source	Type	Size	Distribution	Voltage	Finish	Options
S Linear Facade Fixture	LED Mid-Powered	HE High Efficiency	48 4-foot	DO Downlight Only (8.5 Watts per foot)	U Universal 120 to 277 Volt	PS Platinum Silver	3K 3000K color temp[5]
			36 3-foot			DB Dark Bronze	4K 4000K color temp[5]
			24 2-foot			WH White	
			96 8–foot			BK Black	
						IO Iron Ore	
						RL RAL Color[1,4]	

Notes:
1 Must Provide RAL color number and powder coat manufacture name at time of quote request
2 Color paint chip would need to be provided at time of quote request
3 Must only use factory supplied whip kit to maintain water tight integrity and product warranty
4 Made to order, 4 to 8 week lead time
5 5000K color temperature standard
Optional 3000K and 4000K color temp, built to order

Accessories (Order Separately)

✓ 93073538 Hiraf - LED Whip Kit/ power feed assembly. One required per stand alone fixture or linear run for use with SLED HE[3]

KEY DATA	
Lumens	834 / 1211
Wattage	30
Efficacy (LPW)	83.6 / 82.9
Reported Life (Hours)	L70 >120,000
Input Current Range (Amps)	.036 - 0.12

Page 1/2 Rev. 01/27/20
SL_SLED_SPEC
© 2020 Security Lighting, a division of Hubbell Lighting, Inc. Specifications subject to change without notice.
2100 Golf Road, Suite 460 • Rolling Meadows, IL 60008-4704 / Tel 1.800.LIGHT IT, 1.800.544.4848
Fax 847.279.0642 Website www.securitylighting.com
HUBBELL Lighting

Catalog #: MRS LED 18L SIL FT UNV DIM 50 70CRI MSV | Project: Quick Quack
Prepared By: | Date: | Type: SF

Mirada Small Area (MRS)

Outdoor LED Area Light

IP66

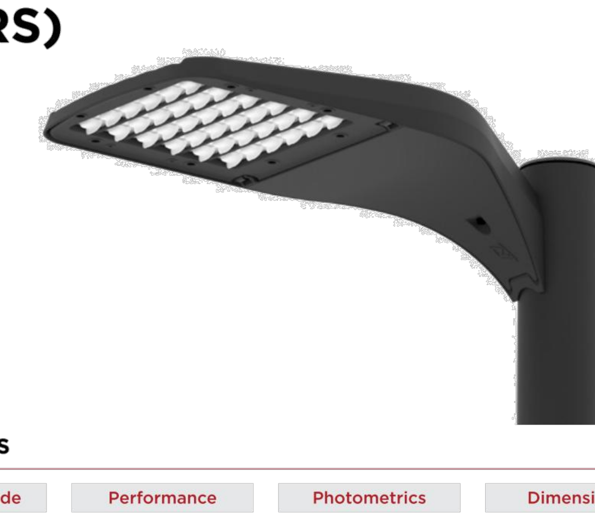

OVERVIEW	
Lumen Package	6,000 - 24,000
Wattage Range	41 - 196
Efficacy Range (LPW)	112 - 156
Fixture Weight lbs (kg)	20 (9.1)

QUICK LINKS

Ordering Guide | Performance | Photometrics | Dimensions

FEATURES & SPECIFICATIONS

Construction
- Rugged die-cast aluminum housing contains factory prewired driver and optical unit. Cast aluminum wiring access door located underneath.
- Fixtures are finished with LSI's DuraGrip® polyester powder coat finishing process. The DuraGrip finish withstands extreme weather changes without cracking or peeling. Other standard LSI finishes available. Consult factory.
- Shipping weight: 27 lbs in carton.

Optical System
- State-of-the-Art one piece silicone optic sheet delivers industry leading optical control with an integrated gasket to provide IP66 rated seal.
- Proprietary silicone refractor optics provide exceptional coverage and uniformity in distribution types 2, 3, 5W, and FT.
- Silicone optical material does not yellow or crack with age and provides a typical light transmittance of 93%.
- Zero uplight.
- Available in 5000K, 4000K, and 3000K color temperatures per ANSI C78.377
- Minimum CRI of 70.
- Integral louver (IL) and house-side shield (IH) options available for improved backlight control without sacrificing street side performance. See page 3 for more details.

Electrical
- High-performance driver features over-voltage, under-voltage, short-circuit and over temperature protection.
- 0-10V dimming (10% - 100%) standard.
- Standard Universal Voltage (120-277 VAC) Input 50/60 Hz or optional High Voltage (347-480 VAC).
- L70 Calculated Life: >60k Hours
- Total harmonic distortion: <20%
- Operating temperature: -40°C to +50°C (-40°F to +122°F).
- Power factor: >.90
- Input power stays constant over life.
- Field replaceable 10kV surge protection device meets a minimum Category C Low operation (per ANSI/IEEE C62.41.2).
- High-efficacy LEDs mounted to metal-core circuit board to maximize heat dissipation
- Driver is fully encased in potting material for moisture resistance and complies with FCC standards. Driver and key electronic components can easily be accessed.

Controls
- Optional integral passive infrared Bluetooth™ motion and photocell sensor. Fixtures operate independently and can be commissioned via iOS or Android configuration app.
- LSI's AirLink™ wireless control system options reduce energy and maintenance costs while optimizing light quality 24/7.

Installation
- Designed to mount to square or round poles.
- A single fastener secures the hinged door, underneath the housing and provides quick & easy access to the electrical compartment.
- Included terminal block accepts up to 12 ga. wire.
- Utilizes LSI's traditional B3 drill pattern.

Warranty
- LSI luminaires carry a 5-year limited warranty. Refer to https://www.lsicorp.com/resources/terms-conditions-warranty/ for more information.

Listings
- Listed to UL 1598 and UL 8750.
- Meets Buy American Act requirements.
- IDA compliant; with 3000K color temperature selection.
- Title 24 Compliant; see local ordinance for qualification information.
- Suitable for wet locations.
- IP66 rated Luminaire per IEC 60598-1.
- 3G rated for ANSI C136.31 high vibration applications are qualified.
- DesignLights Consortium® Listings in progress.

Specifications and dimensions subject to change without notice.

LSI Industries Inc. 10000 Alliance Rd. Cincinnati, OH 45242 • www.lsi-industries.com
(513) 372-3200 • ©2020 LSI Industries Inc. All Rights Reserved. Specifications subject to change without notice.

CLASSIC SERIES

PARAFLEX
Fast Flexible Focused Lighting

DCSHM

ROUND LED WALLPACK LUMINAIRE

PROJECT Quick Quack | DATE | TYPE T1
NOTES

REV: 06 2021

5-YEAR WARRANTY | IP65 RATED | DARK SKY | EM - PACK | BUY AMERICAN ACT COMPLIANT

AVAILABLE IN QUICKSHIP

FULL CUTOFF, HEAVY-DUTY HOUSING
The DCSHM is an 18" Half-Moon Wallpack with a Die Cast Aluminum Body and Impact Resistant Glass Lens

WET LOCATION, IP-65 RATED
Engineered and Constructed for Exterior Environments

EASY TO INSTALL MOUNTING
4" x 4" Gasketed Wall Plate allows the Installer to Quickly Mount and Wire the Fixture without Opening the Housing

120-277V STANDARD **TYPE VS DISTRIBUTION**

OPERATING TEMPERATURE -20C TO 40C
0C - 40C with EM Pack Option

PRODUCT APPLICATIONS
Building Entrances, Walkways, Tunnels, Loading Docks, Bridges, Catwalks, Stairwells

When Specifying Options, Please Check with Factory for Availability and Lead-Time. Any finish other than Paraflex bronze order is non-cancelable and non-returnable. Any modified product, any selected options added to standard products, deem order non-cancelable and non-returnable. All RMA, Return Material Authorization, must be factory approved.

ORDERING GUIDE Sample Part # DCSHM-24W-40K-BZ-D1

MODEL	WATTAGE	COLOR TEMPERATURE (CCT)	HOUSING COLOR	OPTIONS & ACCESSORIES
DCSHM	24W	50K	SL	
	12W 12 WATTS	27K 2700K - WARM WHITE	BZ BRONZE (STANDARD)	MS MOTION SENSOR
	24W 24 WATTS	30K 3000K - WARM WHITE	WH WHITE	MS-D2 MOTION SENSOR WITH BILEVEL DIMMING
	36W 36 WATTS	35K 3500K - NEUTRAL WHITE	BL BLACK	D1 0-10V DIMMING
	48W 48 WATTS	40K 4000K - NEUTRAL WHITE	SL SILVER	D2 STEP DIMMING
	60W 60 WATTS	50K 5000K - COOL WHITE	CC CUSTOM COLOR	EM EMERGENCY BATTERY PACK
		57K 5700K - DAYLIGHT		V1* 480/347V INPUT (120-277V STANDARD)
				*NOT AVAILABLE WITH EM OR MOTION SENSOR

PRODUCT SPECIFICATIONS

NOMINAL WATTAGE	SYSTEM WATTAGE	CCT	LUMENS	EFFICACY	DLC V5.0 LISTING
12W	12.65	3000K	1,530.00	120.95	PREMIUM
12W	12.65	4000K	1,606.50	127.00	PREMIUM
12W	12.65	5000K	1,686.83	133.35	PREMIUM
24W	23.68	3000K	2,802.00	118.33	PREMIUM
24W	23.68	4000K	2,942.10	124.24	PREMIUM
24W	23.68	5000K	3,089.21	130.46	PREMIUM
36W	34.27	3000K	4,203.00	122.64	PREMIUM
36W	34.27	4000K	4,413.15	128.78	PREMIUM
36W	34.27	5000K	4,633.81	135.21	PREMIUM
48W	46.60	3000K	5,604.00	120.26	PREMIUM
48W	46.60	4000K	5,884.20	126.27	PREMIUM
48W	46.60	5000K	6,178.41	132.58	PREMIUM
60W	56.83	3000K	7,005.00	123.26	PREMIUM
60W	56.83	4000K	7,355.25	129.43	PREMIUM
60W	56.83	5000K	7,723.01	135.90	PREMIUM

PRODUCT DIMENSIONS

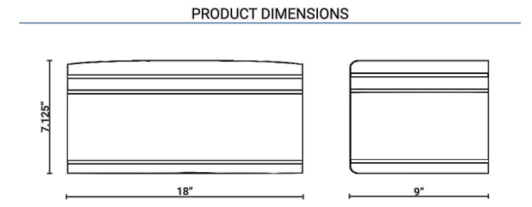

POWER

POWER FACTOR >0.90 - THD <20

PARAFLEX does not warrant or represent that the information is free from errors or omission. The information may change without notice and PARAFLEX is not in any way liable for the accuracy of any information printed and stored or in any way interpreted or used.

A 3 Luger Rd. #1 - Denville, NJ 07834 E info@paraflex.com W www.paraflex.com P 973-340-6040

Fast Flexible Focused Lighting

Stantec
Architecture Inc.
3133 West Frye Road, Suite 300
Chandler, AZ. 85226-5110
TEL. 480.687.6100
www.stantec.com

The Contractor shall verify and be responsible for all dimensions. DO NOT scale the drawing - any errors or omissions shall be reported to Stantec without delay.
The Copyrights to all designs and drawings are the property of Stantec. Reproduction or use for any purpose other than that authorized by Stantec is forbidden.

By | Appd. | YY.MM.DD
Issued
By | Appd. | YY.MM.DD
Revision

Quick Quack CAR WASH

Client/Project
QUICK QUACK CARWASH #43-040
58024 TWENTYNINE PALMS HWY.
YUCCA VALLEY, CA. 92284

Title
LIGHT FIXTURE SELECTIONS

Permit-Seal

REGISTERED PROFESSIONAL ENGINEER RICKERT C. HENRIKSEN No. E-10629 EXP. 6-30-2023 ELECTRICAL STATE OF CALIFORNIA

Date Signed: 7/19/2022

SACRAMENTO ENGINEERING CONSULTANTS
10555 Old Placerville Road
Sacramento, CA 95827-2503
Phone: (916) 368-4468
Fax: (916)368-4490
www.saceng.com
Job No. 22468

Project Number: 2007130200
File Name:
Dwn. | Chkd. | Dsgn. | YY.MM.DD
Drawing No.
Revision | Sheet
ES1.3 of

E:\Shared Drives\Jobs 2022-23\22\22468\E\planning\ES1.3.dwg
2022/07/19 12:42 PM By: Chris

ORIGINAL SHEET - ARCH D