TOWN OF YUCCA VALLEY

STANDARD DRAWINGS

SECTION 400

Section 4 – Storm Drain and Drainage Details

Drawing No.	Description
400	Local Depression
401	Local Depression
402	Local Depression No. 2
403	Local Depression No. 3
404	Curb Outlet Structure
405	Outlet Structure
406	Parkway Culvert with Steel Pate Cover
410	Junction Structure No. 1
411	Junction Structure No. 2
411A	Junction Structure No. 2
412	Junction Structure No. 3
413	Junction Structure No. 4
414	Junction Structure No. 5
415	Junction Structure No. 6
416	Junction Structure No. 7
420	Transition Structure No. 1
421	Transition Structure No. 2
422	Transition Structure No. 3
423	Transition Structure No. 4
430	Connector Pipe Collar
431	Concrete Collar for Pipe 12 Inches Through 66 Inches
440	Headwall Wing – Type
441	Headwall "U" – Type
450	Cutoff Wall for Drainage Channel
451	Channel Crossing
460	Inlet Type X (Grate Details) Inlet Type IX (Checkered Plate
460	Storm Drain Cleanout
461	Standard Dry Well
462	Timber Bulkheads
463	Timber Bulkheads
464	Concrete Bulkheads
465	Pipe Supports Across Trenches
466	Bedding and Pay Lines
470	Catch Basin
471	Catch Basin No. 4 (Sht. 1 of 2)
471A	Catch Basin No. 4 (Sht. 2 of 2)

Drawing No.	Description
472	Catch Basin No. 6
473	Catch Basin Reinforcement
474	Special Connections to Catch Basin
475	Type "A" Catch Basin
476	Catch Basin Mountain Roads
476A	Catch Basin Mountain Roads
477	Catch Basin Grate
480	Catch Basin Opening
480A	Catch Basin Steel Pate Galvanized Steel Step
481	Removable Protection Bar for Catch Basins
481A	Detail of Catch Basin Opening & Installation Details
482	Standard Drop Step
483	Manhole Frame & Cover for Catch Basins
490	Storm Drain Manhole No. 1 (Sht. 1 of 2)
490A	Storm Drain Manhole No. 1 (Sht. 2 of 2)
491	Storm Drain Manhole No. 2
492	Storm Drain Manhole No. 3
493	Storm Drain Manhole No. 4
493A	Storm Drain Manhole No. 4
494	Manhole Shaft for Cast Pipe
495	Standard Pressure Manhole Shaft
496	Manhole Frame & Cover – Roadway
497	Manhole Frame & Cover – Parkway
498	Manhole Frame & Cover – Non-Rocking
499	Manhole Frame & Cover – Pressure Type

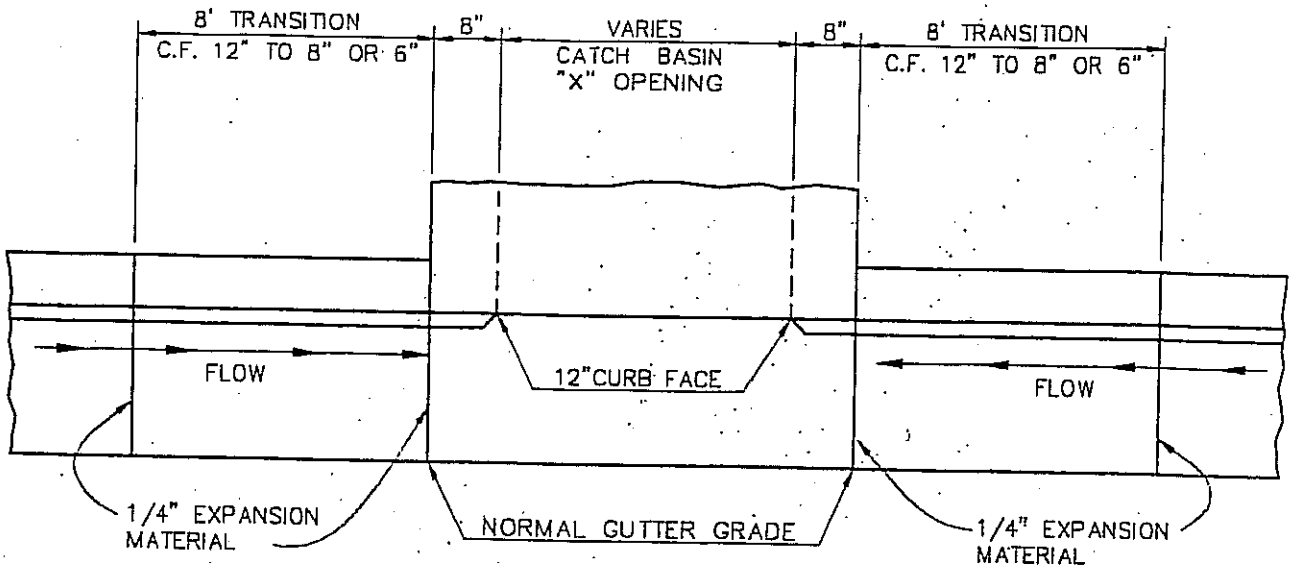

NOTES:

1. LOCAL DEPRESSION SHALL BE CONSTRUCTED OF CLASS "B" CONCRETE 6" THICK
2. CURB AND GUTTER SHALL BE CONSTRUCTED PRIOR TO CONSTRUCTING TOP OF CATCH BASIN AND CURB TRANSITIONS.

REGISTERED PROFESSIONAL ENGINEER
ROBERT K. HOLT
No.27943
EXPIRES
03-31-98
CIVIL
STATE OF CALIFORNIA

APPROVED:

DATE

APPROVED: TOWN ENGINEER

Robert K. Holt R.C.E. 27943

REVISION	BY	DATE

Town of Yucca Valley

LOCAL DEPRESSION

STANDARD DRAWING NO. 400

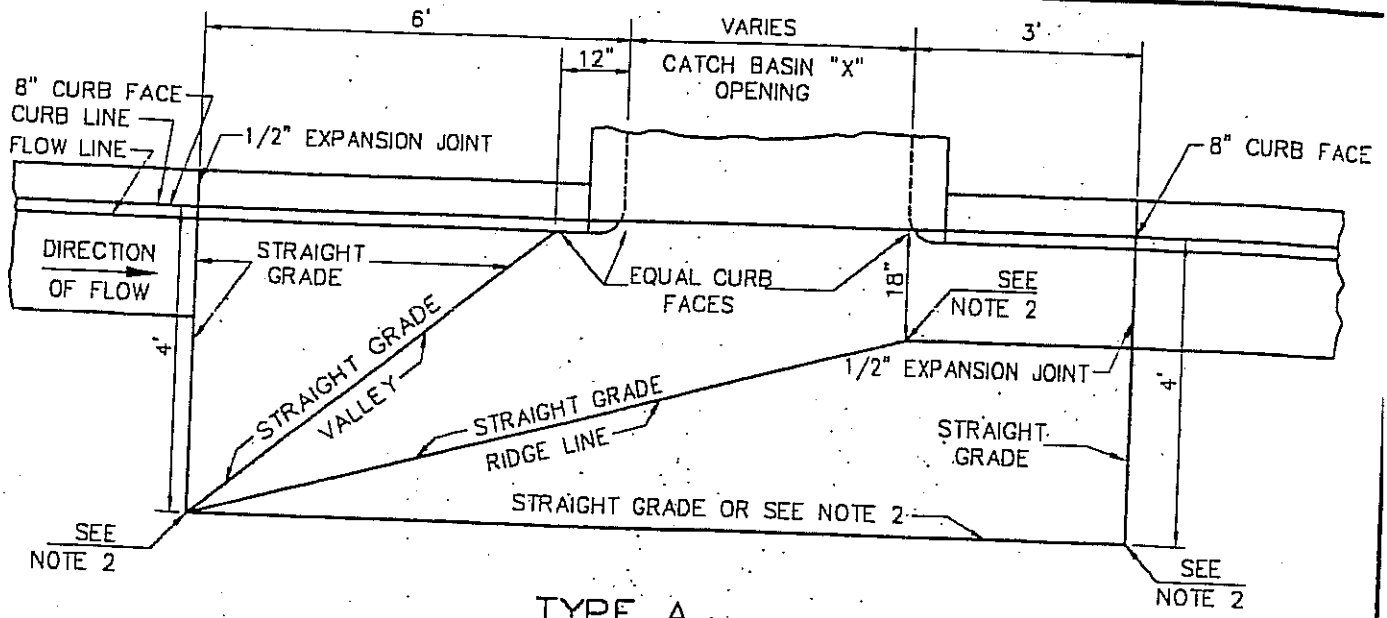

TYPE A

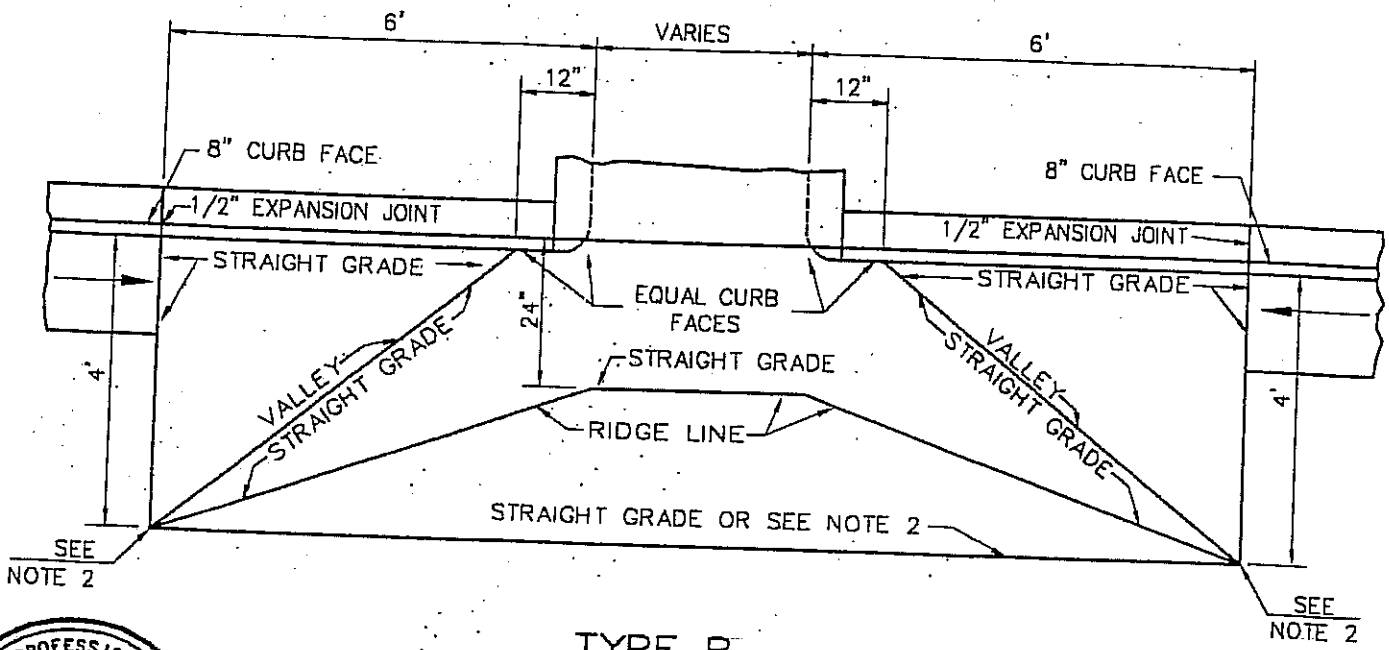

TYPE B

REGISTERED PROFESSIONAL ENGINEER
ROBERT K. HOLT
No.27943
EXPIRES 03-31-98
CIVIL
STATE OF CALIFORNIA

NOTES:

1. LOCAL DEPRESSION SHALL BE CONSTRUCTED OF CLASS "B" CONCRETE 8" THICK.
2. ELEVATIONS SHALL BE SHOWN ON CONSTRUCTION PLANS. THE OUTER EDGE OF THE LOCAL DEPRESSION SHALL CONFORM TO FINISHED STREET GRADE.
3. SPECIAL DETAILS GOVERNING THE CONSTRUCTION ON A VERTICAL CURVE SHALL BE SHOWN ON CONSTRUCTION PLANS.

APPROVED: _____ DATE _____

APPROVED: TOWN ENGINEER Robert K. Holt R.C.E. 27943

REVISION	BY	DATE

Town of Yucca Valley

LOCAL DEPRESSION

STANDARD DRAWING NO. 401

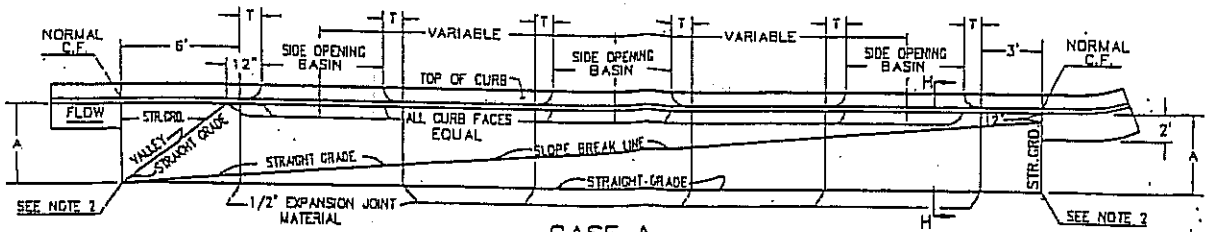

CASE A

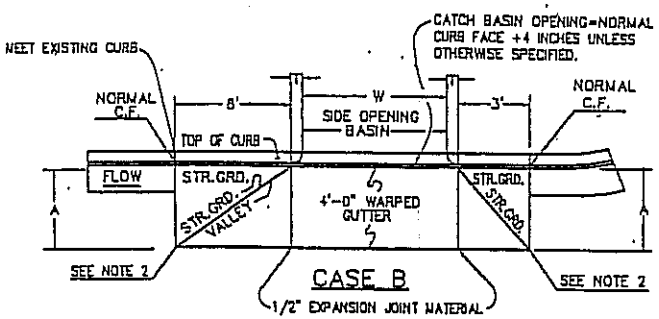

CASE B

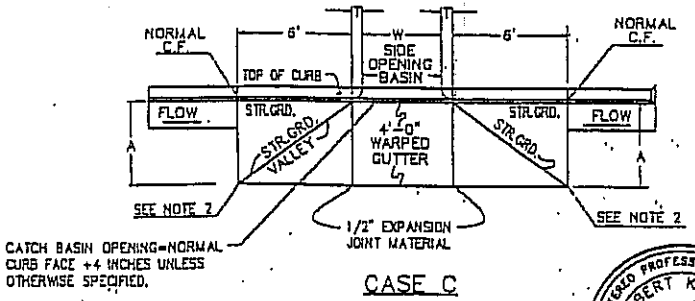

CASE C

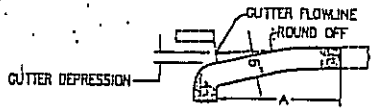

SECTION H-H

NOTES:

1. LOCAL DEPRESSION SHALL BE CASE B UNLESS OTHERWISE SPECIFIED ON GENERAL PLAN.
2. ELEVATIONS AT OUTER CORNERS SHOWN ON GENERAL PLAN. IF NO ELEVATIONS ARE SPECIFIED, THE OUTER EDGE OF THE LOCAL DEPRESSION SHALL CONFORM TO FINISHED STREET SURFACE.
3. A=4 FEET UNLESS OTHERWISE SPECIFIED.
   T=SEE STANDARD DRAWING 471 OR 472.
   W=SEE STANDARD DRAWING 471 OR 472.
4. WHERE NO CURB EXISTS, CURB SHALL BE CONSTRUCTED BETWEEN ENDS OF LOCAL DEPRESSION. CURB SECTION SHALL CONFORM TO TOWN OF YUCCA VALLEY STANDARD DWGS.
5. DEPRESSION SHALL BE CLASS "B" CONCRETE.

REGISTERED PROFESSIONAL ENGINEER
ROBERT K. HOLT
No.27943
EXPIRES 03-31-98
CIVIL
STATE OF CALIFORNIA

APPROVED: _____ DATE _____

APPROVED: TOWN ENGINEER Robert K. Holt R.C.E. 27943

REVISION	BY	DATE

Town of Yucca Valley

LOCAL DEPRESSION
NO. 2

STANDARD DRAWING NO. 402

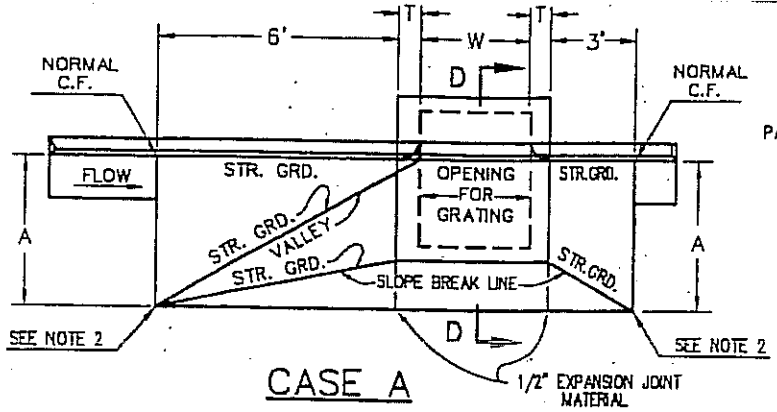

CASE A

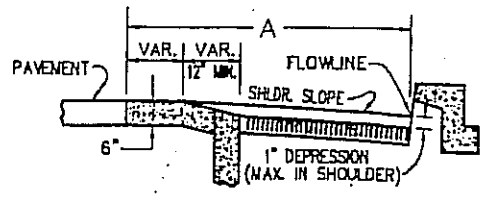

SECTION D-D

CATCH BASIN OPENING= NORMAL CURB FACE + 4 INCHES UNLESS OTHERWISE SPECIFIED.

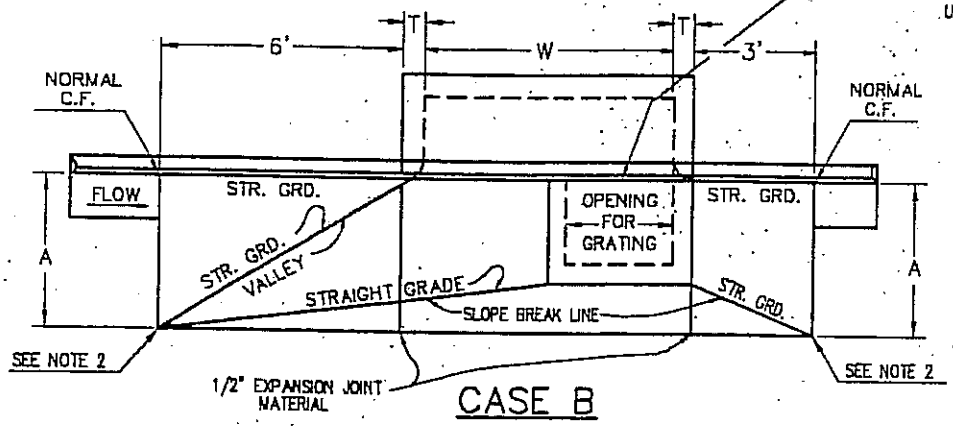

CASE B

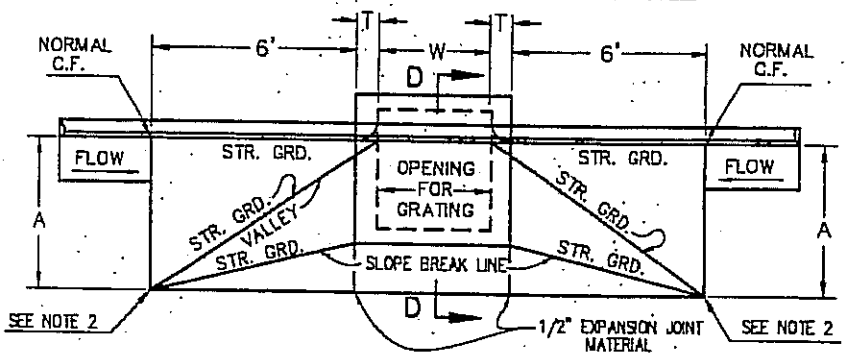

CASE C

NOTES:

1. LOCAL DEPRESSION SHALL BE:
   (a) CASE "A" FOR CATCH BASIN NO. 4 (SEE STD. DWG. 471) UNLESS OTHERWISE SPECIFIED.
   (b) CASE "B" FOR CATCH BASIN NO. 6 (SEE STD. DWG. 472) UNLESS OTHERWISE SPECIFIED.
2. ELEVATIONS AT OUTER CORNERS SHOWN ON PROJECT DRAWINGS. IF NO ELEVATIONS ARE SPECIFIED THE OUTER EDGE OF THE LOCAL DEPRESSION SHALL CONFORM TO THE FINISHED STREET SURFACE.
3. A=4 FEET UNLESS OTHERWISE SPECIFIED.
   T=SEE STANDARD DRAWING 471 OR 472.
   W=SEE STANDARD DRAWING 471 OR 472.
4. WHERE NO CURB EXISTS, CURB SHALL BE CONSTRUCTED BETWEEN ENDS OF LOCAL DEPRESSION. CURB SECTION SHALL CONFORM TO TOWN OF YUCCA VALLEY STANDARD DWGS.
5. DEPRESSION SHALL BE CLASS "B" CONCRETE.

REGISTERED PROFESSIONAL ENGINEER
ROBERT K. HOLT
No.27943
EXPIRES 03-31-98
CIVIL
STATE OF CALIFORNIA

APPROVED: _____ DATE _____

APPROVED: TOWN ENGINEER Robert K. Holt R.C.E. 27943

REVISION	BY	DATE

Town of Yucca Valley

LOCAL DEPRESSION NO. 3

STANDARD DRAWING NO. 403

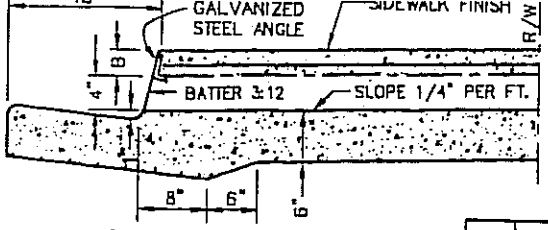

SECTION A–A

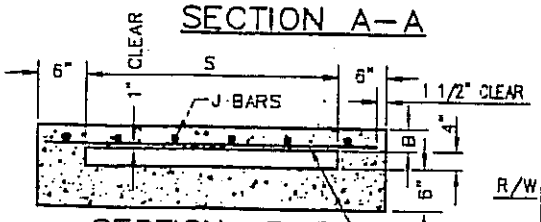

SECTION B–B

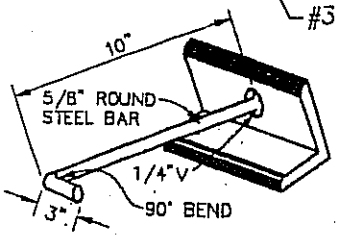

DETAIL OF ANCHOR
(SEE NOTES 5 & 7)

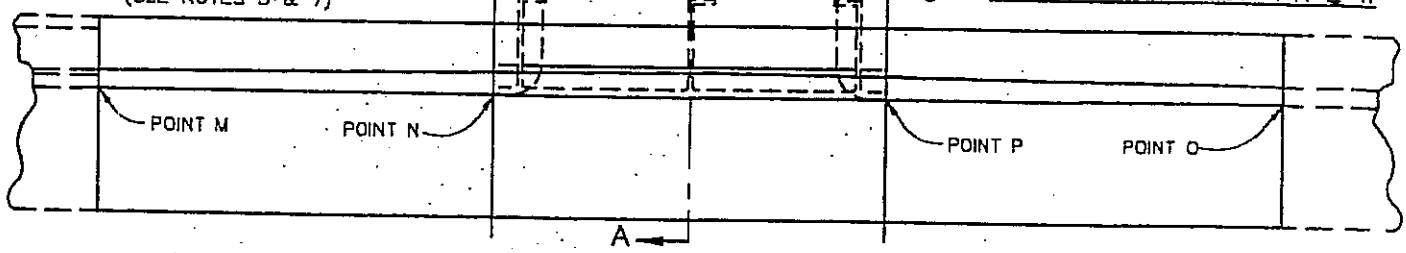

PLAN

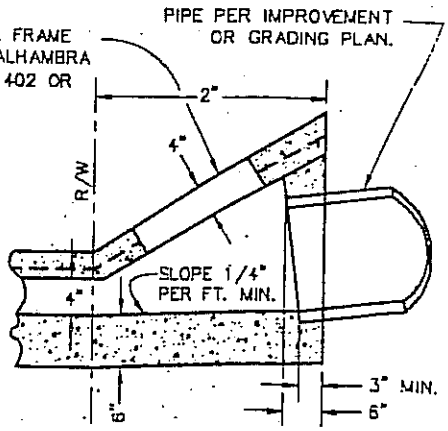

SECTION – INLET TYPE I

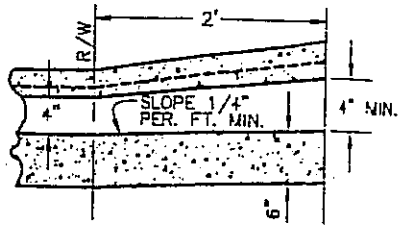

SECTION – INLET TYPE II

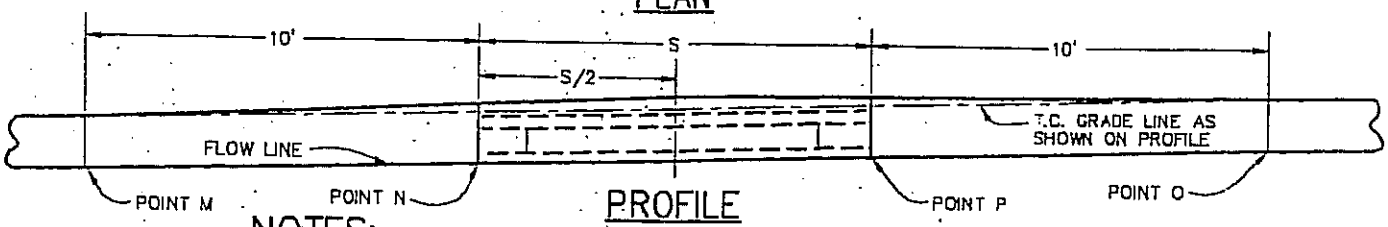

PROFILE

NOTES:

1. FLOOR OF BOX TO BE TROWELED SMOOTH.
2. WHEN TOE OF SLOPE IS WITHIN THE R/W, INLET TYPE I BEGINS AT THE TOE, RATHER THAN AT THE R/W LINE.
3. FOR OPEN DITCH APPROACH (TYPE II) THE 2' OR MORE IS FROM THE R/W LINE.
4. TOP OF INLET STRUCTURE (TYPE I OR II) TO BE FLUSH WITH ADJACENT SIDEWALK WHERE PRACTICAL.
5. A HEADED STEEL STUD 5/8" X 6 3/8" WITH HEAD 0.1" ATTACHED BY A FULL PENETRATION BUTT WELD MAY BE USED AS AN ALTERNATE ANCHOR.
6. NORMAL CURB AT POINTS M AND O. B + 5" AT POINTS N AND P.
7. THE 3" LEG OF THE INTERIOR ANCHORS SHALL BE PARALLEL TO THE TOP OF SIDEWALK.

S	B	GALVANIZED STEEL ANGLE	ANCHOR	J BARS		
				SIZE	SPACING	LENGTH
1'-0"	3"	2 1/2" X 2" X 3/8"	2	#3	7"	1'-9"
1'-6"	"	"	"	"	"	2'-3"
2'-0"	"	"	"	"	"	2'-9"
2'-6"	"	"	"	"	"	3'-3"
3'-0"	"	"	3	"	"	3'-9"
3'-6"	"	"	"	"	6"	4'-3"
4'-0"	"	"	"	"	5"	4'-9"
4'-6"	4"	3 1/2" X 3" X 1/2"	"	"	5 1/2"	5'-3"
5'-0"	"	"	"	"	5"	5'-9"
5'-6"	"	"	"	"	4"	6'-3"
6'-0"	"	"	"	"	3 1/2"	6'-9"

REGISTERED PROFESSIONAL ENGINEER
ROBERT K. HOLT
No.27943
EXPIRES 03-31-98
CIVIL
STATE OF CALIFORNIA

APPROVED:

DATE

APPROVED: TOWN ENGINEER

Robert K. Holt R.C.E. 27943

REVISION	BY	DATE

Town of Yucca Valley

CURB OUTLET STRUCTURE

STANDARD DRAWING NO. 404

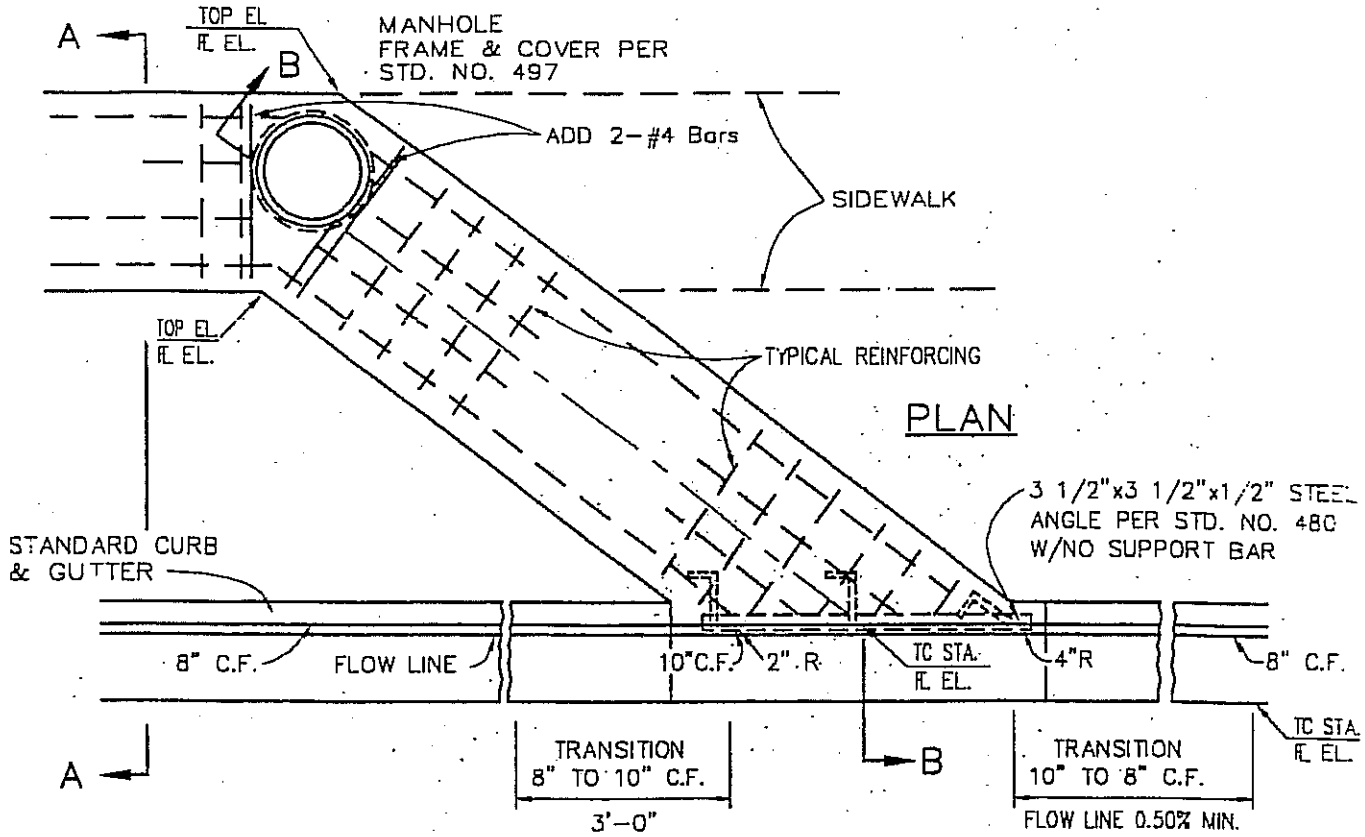

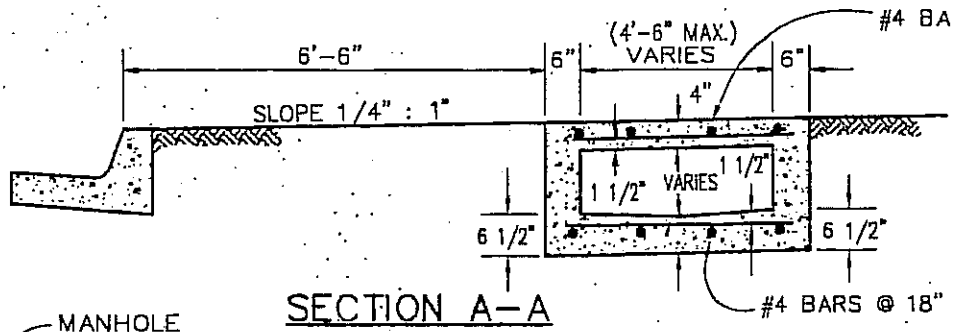

SECTION A-A

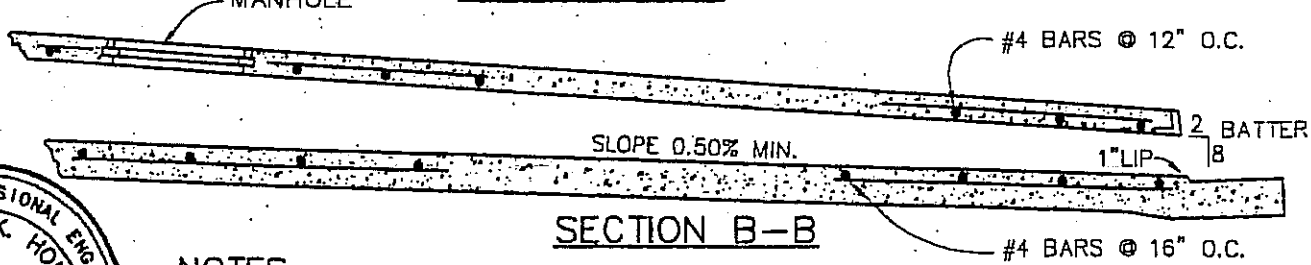

SECTION B-B

REGISTERED PROFESSIONAL ENGINEER
ROBERT K. HOLT
No.27943
EXPIRES
03-31-98
CIVIL
STATE OF CALIFORNIA

NOTES:

1. CONCRETE SHALL BE CLASS "A"
2. FLOOR OF STRUCTURE SHALL BE GIVEN A STEEL TROWEL FINISH.
3. TOP OF BOX TO HAVE SIDEWALK FINISH.
4. ANCHORS SHALL BE SYMMETRICALLY SPACED AND NOT TO EXCEED 4' BETWEEN CENTERS. AND BE PLACED 4 1/2" FROM EACH END OF THE STEEL ANGLE. A MINIMUM OF 3 ANCHORS IS REQUIRED.

APPROVED:

DATE

APPROVED: TOWN ENGINEER

Robert K. Holt R.C.E. 27943

REVISION	BY	DATE

Town of Yucca Valley

OUTLET STRUCTURE

STANDARD DRAWING NO. 405

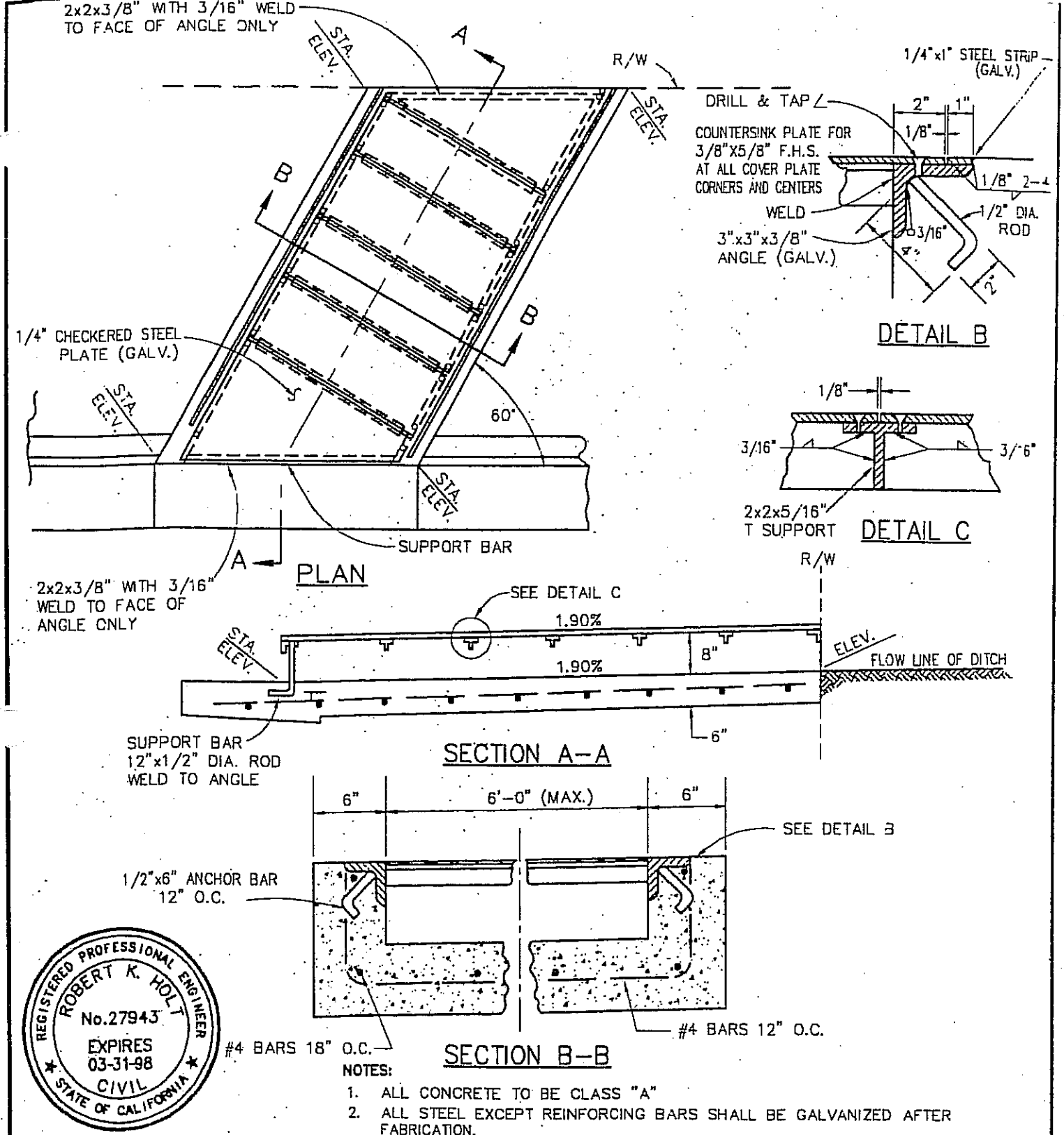

NOTES:

1. ALL CONCRETE TO BE CLASS "A"
2. ALL STEEL EXCEPT REINFORCING BARS SHALL BE GALVANIZED AFTER FABRICATION.

APPROVED: _____ DATE _____

APPROVED: TOWN ENGINEER Robert K. Holt R.C.E. 27943

REVISION	BY	DATE

Town of Yucca Valley

PARKWAY CULVERT W/STEEL PLATE COVER

STANDARD DRAWING NO. 406

APPROVED:

APPROVED: TOWN ENGINEER

R.C.E. 27943

DATE

REGISTERED PROFESSIONAL ENGINEER
ROBERT K. HOLT
No. 27943
EXPIRES 03-31-98
CIVIL
STATE OF CALIFORNIA

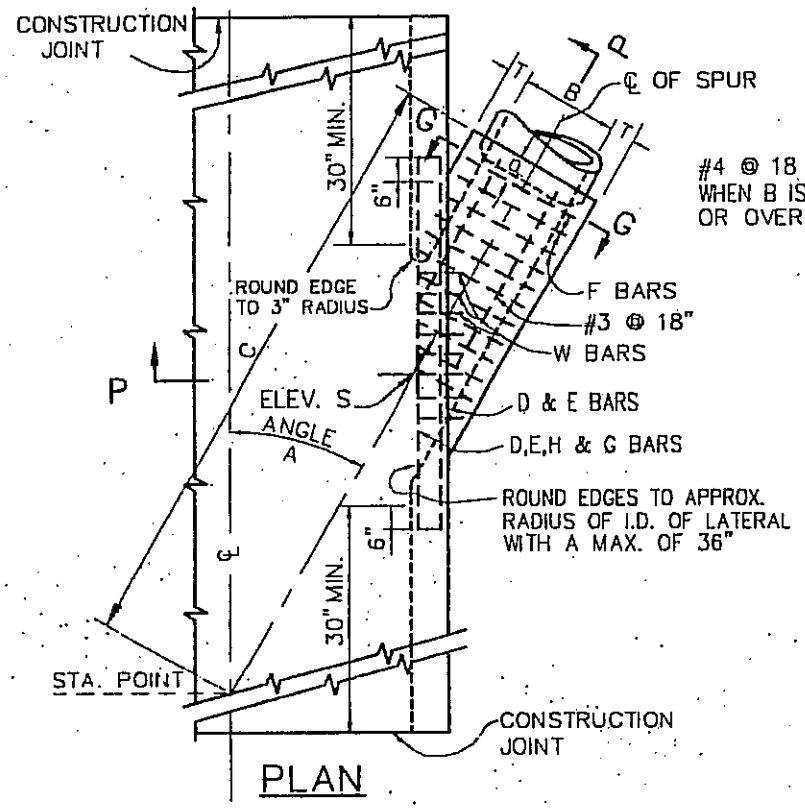

PLAN

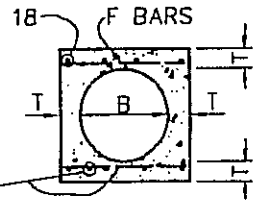

SECTION G–G

TABLE

FOR DIMENSIONS AND BAR SIZE

B (INCHES)	T (INCHES)	D,E,H & G BARS	F BARS
12	4	#5	# 4 @ 6
15	4 1/4		
18	4 1/2		
21	5		
24	5 1/4		
27	5 1/2		
30	6		
33	6 1/4		
36	6 1/2		
39	7		
42	7 1/2	#6	# 5 @ 6
45	7 3/4		
48	8		
51	8 1/2		
54	9		
57	9 1/4		
60	9 1/2		
63	10		
66	10 1/4		
69	10 3/4		
72	11		
78	11 3/4		
84	12 1/2		
90	13 1/4	#7	# 6 @ 6
96	14		
102	15 1/2		
108	16		
114	16 1/2		
120	17		
126	17		
132	17 1/2		
138	17 1/2		
144	18		

NOTES:

1. VALUES FOR A, B, C, ELEV. R AND ELEV. S ARE SHOWN ON PROJECT DRAWINGS. TABLE OF VALUES FOR T SHOWN ON THIS PLAN.
2. STATIONS SPECIFIED ON DRAWINGS APPLY AT THE INTERSECTION OF CENTERLINES AT MAIN LINE AND LATERALS, EXCEPT THAT STATIONS FOR CATCH BASIN CONNECTOR PIPE APPLY AT INSIDE WALL OF STRUCTURE.
3. REINFORCING STEEL SHALL BE STRAIGHT BARS 1 1/2" CLEAR FROM INSIDE FACE OF CONCRETE UNLESS OTHERWISE SHOWN.
   W BARS ARE OF SIZE AND SPACING SPECIFIED FOR WALL STEEL ON PLAN AND SHALL BE CUT IN CENTER OF OPENING AND BENT INTO TOP AND BOTTOM OF JUNCTION STRUCTURE.
   OMIT H BARS WHEN SOFFIT OF SPUR IS 12" OR LESS BELOW SOFFIT OF MAIN LINE AND OMIT G BARS WHEN INVERT OF SPUR IS 12" OR LESS ABOVE FLOOR LINE AT MAIN LINE.
4. JUNCTION STRUCTURE SHALL BE POURED MONOLITHICALLY WITH MAIN LINE STORM DRAIN, MANHOLE OR TRANSITION.
5. FLOOR OF STRUCTURE SHALL BE STEEL-TROWELED TO THE SPRING LINE.
6. STRUCTURAL CONCRETE SHALL BE CLASS "A".
7. EMBEDMENT P SHALL BE 5" FOR B = 96" OR LESS AND 8" FOR B OVER 96".
8. BACKFILL UNDER STRUCTURE WITH 1-3-5 MIX CONCRETE, OR COMPACT SOIL TO RELATIVE DENSITY REQUIRED BY SPECIFICATIONS. BACKFILL MAY BE OMITTED IF STRUCTURE IS LAID ON UNDISTURBED EARTH TO STORM DRAIN WALL.

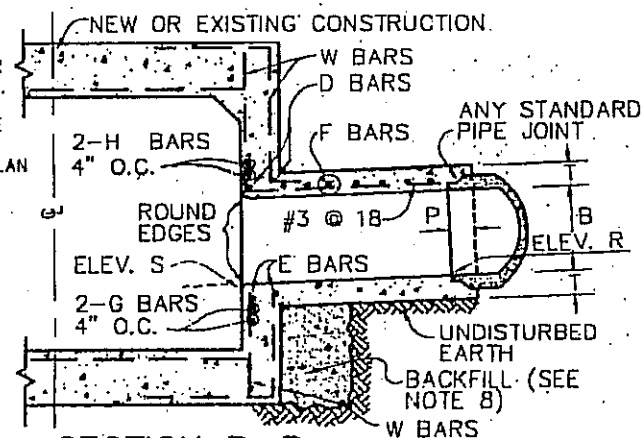

SECTION P–P

Town of Yucca Valley

JUNCTION STRUCTURE NO. 1

STANDARD DRAWING NO. 410

REVISION	BY	DATE

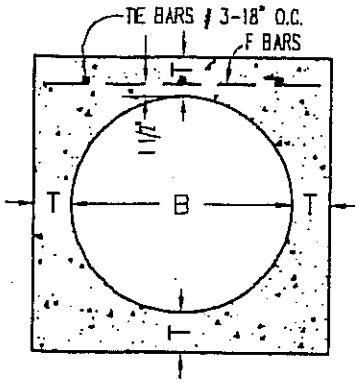

SECTION M-M

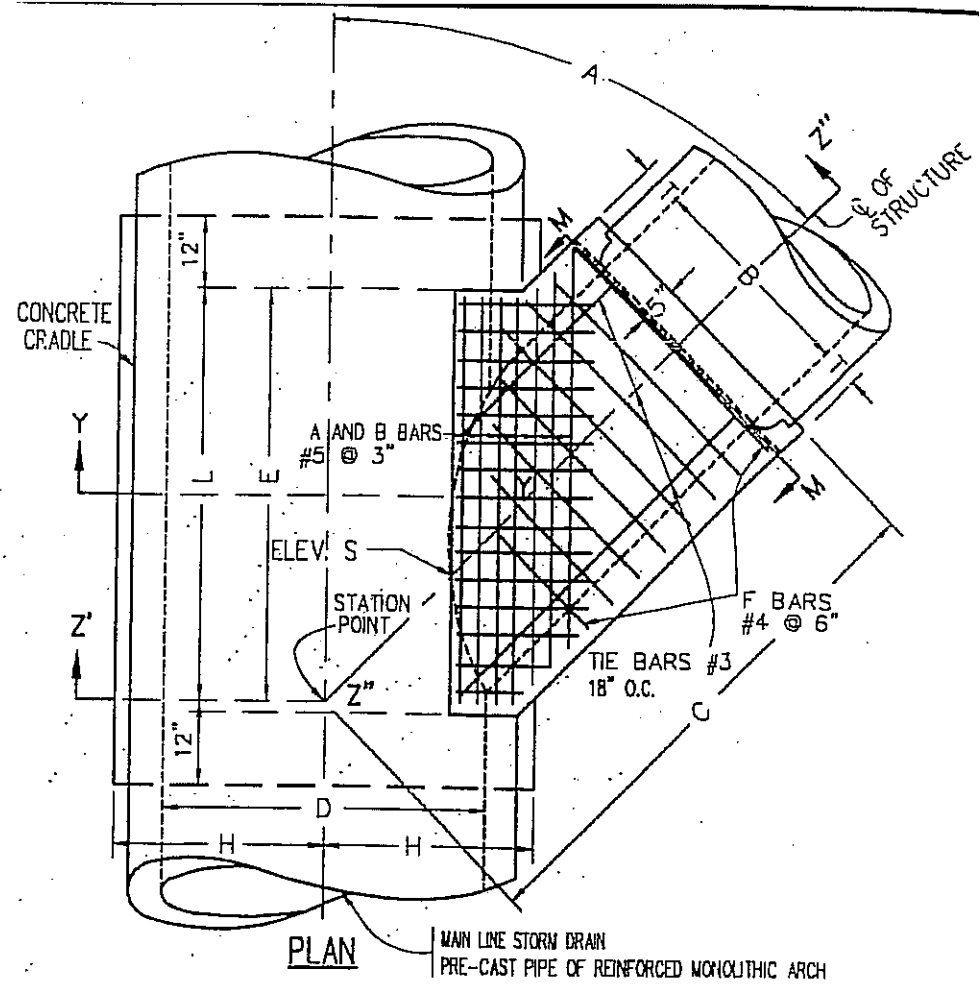

PLAN

TABLE OF VALUES FOR T	
B	T
12"	4"
15"	4 1/4"
18"	4 1/2"
21"	5"
24"	5 1/4"
27"	5 1/2"
30"	6"
33"	6 1/4"
36"	6 1/2"
39"	7"

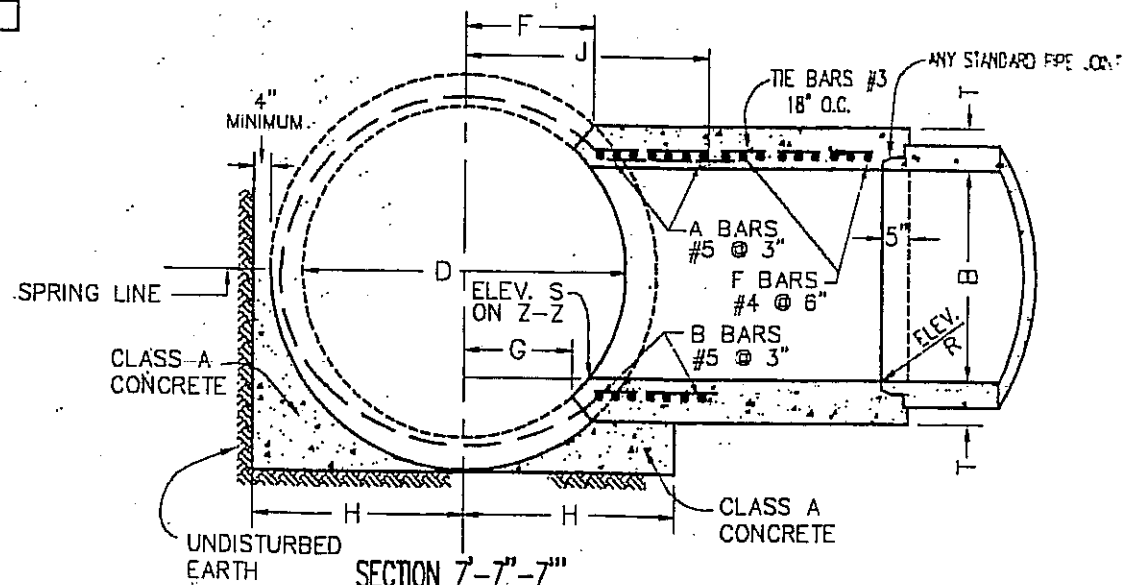

SECTION Z'-Z"-Z'''
Projected on Y-Y-Z'

REGISTERED PROFESSIONAL ENGINEER
ROBERT K. HOLT
No.27943
EXPIRES 03-31-98
CIVIL
STATE OF CALIFORNIA

APPROVED:

DATE

APPROVED: TOWN ENGINEER
Robert K. Holt
R.C.E. 27943

REVISION	BY	DATE

Town of Yucca Valley

JUNCTION STRUCTURE
NO. 2

STANDARD DRAWING NO. 411

NOTES FOR JUNCTION STRUCTURE NO. 2

1. VALUES FOR A, B, C, D, E, F, G, L, ELEVATION R, AND ELEVATION S SHOWN ON IMPROVEMENT PLAN.
2. PIPE SHALL BE CRADLED IN CLASS A CONCRETE EXTENDING LONGITUDINALLY TO POINTS 1 FT. BEYOND THE LIMITS OF L. H=1/2 OUTSIDE DIAMETER OF PIPE + 4" AS A MINIMUM. CRADLE MAY BE OMITTED ON SIDE OPPOSITE LATERAL INLET WHEN CONSTRUCTED IN CONNECTION WITH EXISTING STORM DRAIN.
3. A AND B BARS SHALL BE CARRIED TO POINT NOT LESS THAN J DISTANCE FROM CENTERLINE, $J=\frac{7D}{12}+6"$.
4. RECTANGULAR OPENING IN MAIN LINE PIPE SHALL BE CUT WITHIN THESE LIMITS NORMAL TO PIPE SURFACE WITHOUT DAMAGING STEEL. VALUES FOR F, G, AND L ON IMPROVEMENT PLAN.
5. TRANSVERSE REINFORCEMENT IN PIPE SHALL BE CUT IN CENTER OF OPENING AND BENT TO UNIFORM DISTANCE FROM TOP AND BOTTOM OF JUNCTION STRUCTURE.
6. STRUCTURAL CONCRETE SHALL BE CLASS "A".
7. REINFORCING STEEL SHALL BE ROUND, DEFORMED, STRAIGHT BARS, 1-1/2" CLEAR FROM INSIDE FACE OF CONCRETE UNLESS OTHERWISE SHOWN.
8. STEEL SCHEDULE AS SHOWN.
9. MONOLITHIC ARCH: WHEN JUNCTION STRUCTURE NO. 2 IS SPECIFIED WITH REINFORCED MONOLITHIC ARCH STORM DRAIN, VALUE D SHALL REFER TO THE CLEAR SPAN OF THE ARCH. REINFORCING STEEL SHALL BE CUT AND BENT INTO JUNCTION STRUCTURE THE SAME AS FOR PIPE. CONCRETE CRADLE UNDER REINFORCED MONOLITHIC ARCH IS NOT REQUIRED.
10. FLOOR OF STRUCTURE SHALL BE STEEL-TROWELED TO SPRING LINE.

REGISTERED PROFESSIONAL ENGINEER
ROBERT K. HOLT
No.27943
EXPIRES
03-31-98
CIVIL
STATE OF CALIFORNIA

APPROVED: _____ DATE _____

APPROVED: TOWN ENGINEER
Robert K. Holt R.C.E. 27943

REVISION	BY	DATE

Town of Yucca Valley

JUNCTION STRUCTURE
NO. 2

STANDARD DRAWING NO. 411A

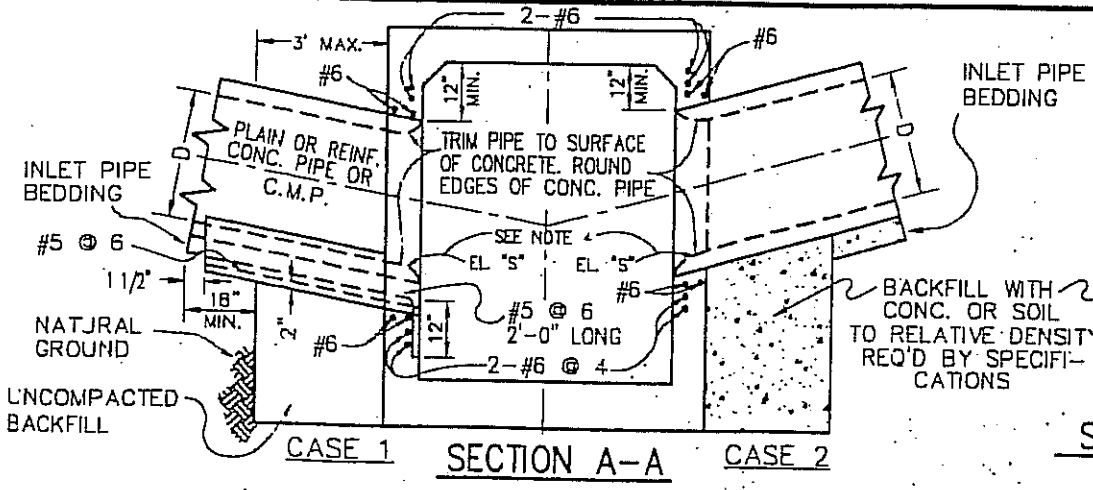

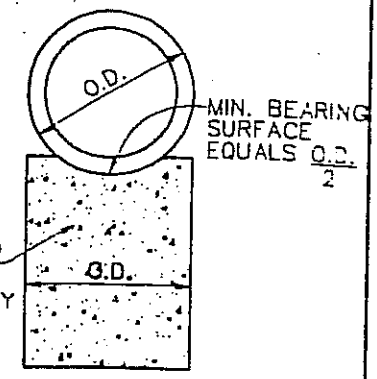

SECTION B-B

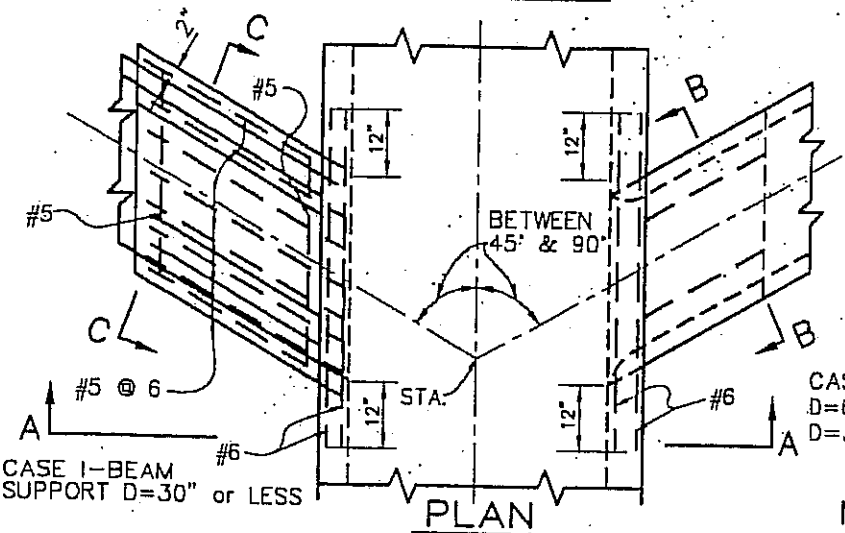

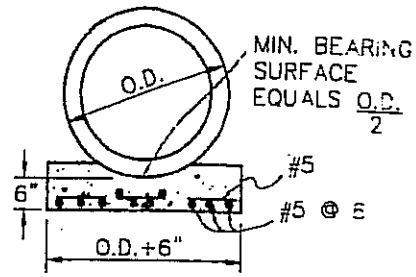

SECTION C-C

NOTES:

1. ALL CORRUGATED METAL PIPE AND FITTINGS SHALL BE GALVANIZED
2. USE JUNCTION STRUCTURE NO. 1 WHERE SIZE OF THE INLET PIPE EXCEEDS DIMENSIONS GIVEN ABOVE.
3. UNLESS OTHERWISE SPECIFIED, CASE 2 SUPPORT SHALL BE USED.
4. ELEVATION "S" SHALL BE SPECIFIED ON PROJECT DRAWINGS.

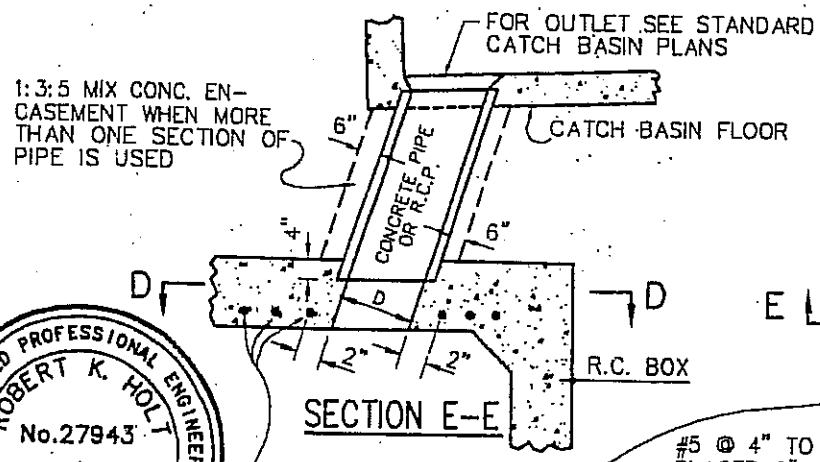

SECTION E-E

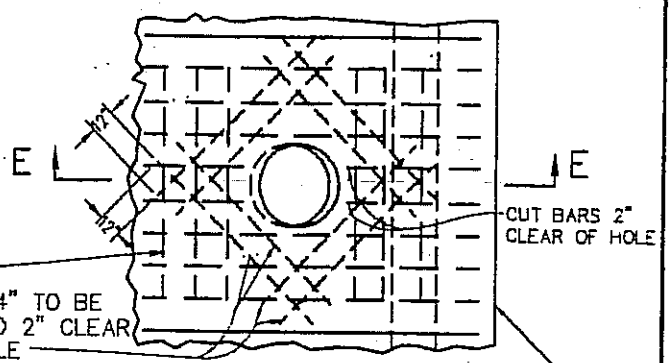

SECTION D-D

CASE 3-TOP SLAB ENTRANCE D=30" OR LESS

#6 @ 4" LENGTH = D IN FT. + 3', PLACED UNDER CUT BARS AND ON TOP OF UNCUT BARS IN BOTTOM OF TOP SLAB. OMIT BARS THAT FALL OVER SIDEWALKS.

REGISTERED PROFESSIONAL ENGINEER
ROBERT K. HOLT
No.27943
EXPIRES 03-31-98
CIVIL
STATE OF CALIFORNIA

APPROVED: _____ DATE _____

APPROVED: TOWN ENGINEER Robert K. Holt R.C.E. 27943

REVISION	BY	DATE

Town of Yucca Valley

JUNCTION STRUCTURE NO. 3

STANDARD DRAWING NO. 412

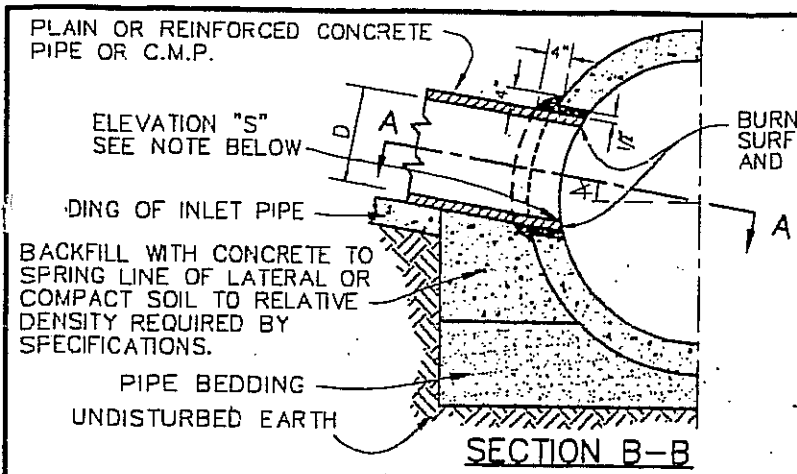

SECTION B–B

CASE–1

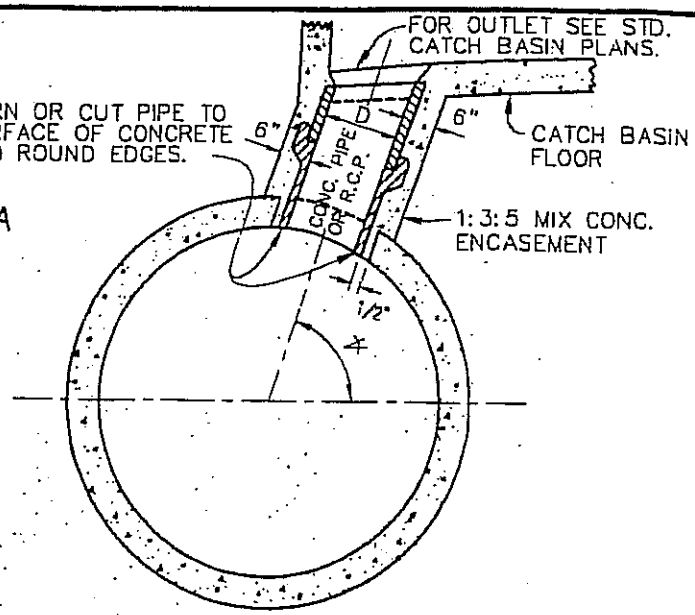

CASE–2

CATCH BASIN ABOVE STORM DRAIN

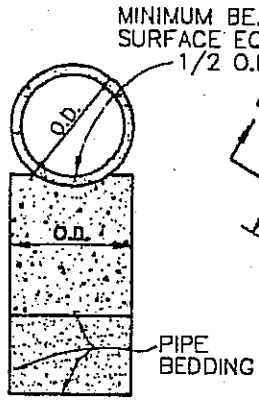

SECTION C–C

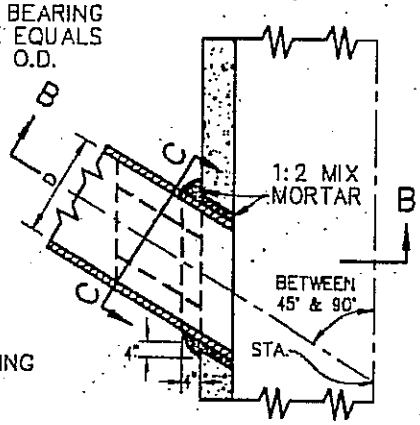

SECTION A–A

CASE–1–SIDE INLET

NOTE:

ALL CONNECTOR PIPES (WITHIN THE ANGLES SPECIFIED FOR CASE 2) SHALL BE ENCASED WHEN LAID WITHIN THE MAIN LINE EXCAVATED TRENCH, OR WHEN LAID ON FILL WHICH HAS NOT BEEN DENSIFIED.

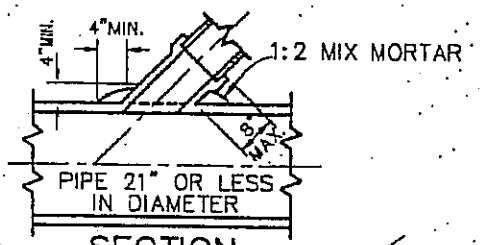

SECTION

NOTES: CASES 1&2

1. D SHALL BE 24" OR LESS, AND IN NO CASE SHALL THE OUTSIDE DIAMETER OF THE INLET PIPE EXCEED ONE-HALF THE INSIDE DIAMETER OF THE MAIN LINE. IF ∡ IS 45° OR LESS, USE CASE 1. IF ∡ IS GREATER THAN 45°, USE CASE 2.
2. ℄ OF INLET SHALL BE ON RADIUS OF MAIN STORM DRAIN EXCEPT WHEN ELEVATION "S" IS SHOWN ON THE PROJECT DRAWING PROFILE.
3. THE MINIMUM OPENING INTO THE EXISTING STORM DRAIN SHALL BE THE OUTSIDE DIAMETER OF THE CONNECTING PIPE + 1 INCH.
4. ALL CORRUGATED METAL PIPE AND FITTINGS SHALL BE GALVANIZED.
5. STA. AT F.L. & CENTER OF PIPE, SHOWN ON PROJECT DWG. PROFILE.

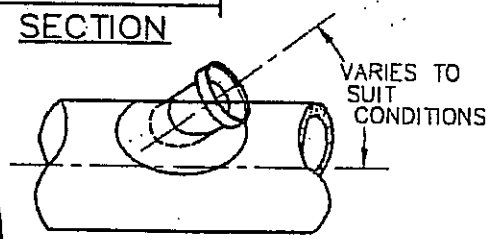

PLAN

CASE–3–SADDLE CONNECTION

NOTES: CASE–3–SADDLE CONNECTION

1. CONNECTIONS TO PIPES 21" OR LESS IN DIAMETER WITHOUT JUNCTION STRUCTURES OR PRECAST Y BRANCHES SHALL BE MADE WITH SADDLES.
2. TRIM OR CUT SADDLE TO FIT SNUGLY OVER THE OUTSIDE OF THE MAIN PIPE AND SO ITS AXIS WILL BE ON THE LINE AND GRADE OF THE CONNECTING PIPE.
3. THE OPENING INTO THE PIPE SHALL BE CUT AND TRIMMED TO FIT THE SADDLE SO THAT NO PART WILL PROJECT WITHIN THE BORE OF THE SADDLE PIPE.
4. THE CONNECTION PIPE SHALL BE SUPPORTED AS SHOWN IN CASE 1 AND 2.

REGISTERED PROFESSIONAL ENGINEER
ROBERT K. HOLT
No.27943
EXPIRES 03-31-98
CIVIL
STATE OF CALIFORNIA

APPROVED: _____ DATE _____

APPROVED: TOWN ENGINEER Robert K. Holt R.C.E. 27943

REVISION	BY	DATE

Town of Yucca Valley

JUNCTION STRUCTURE NO. 4

STANDARD DRAWING NO. 413

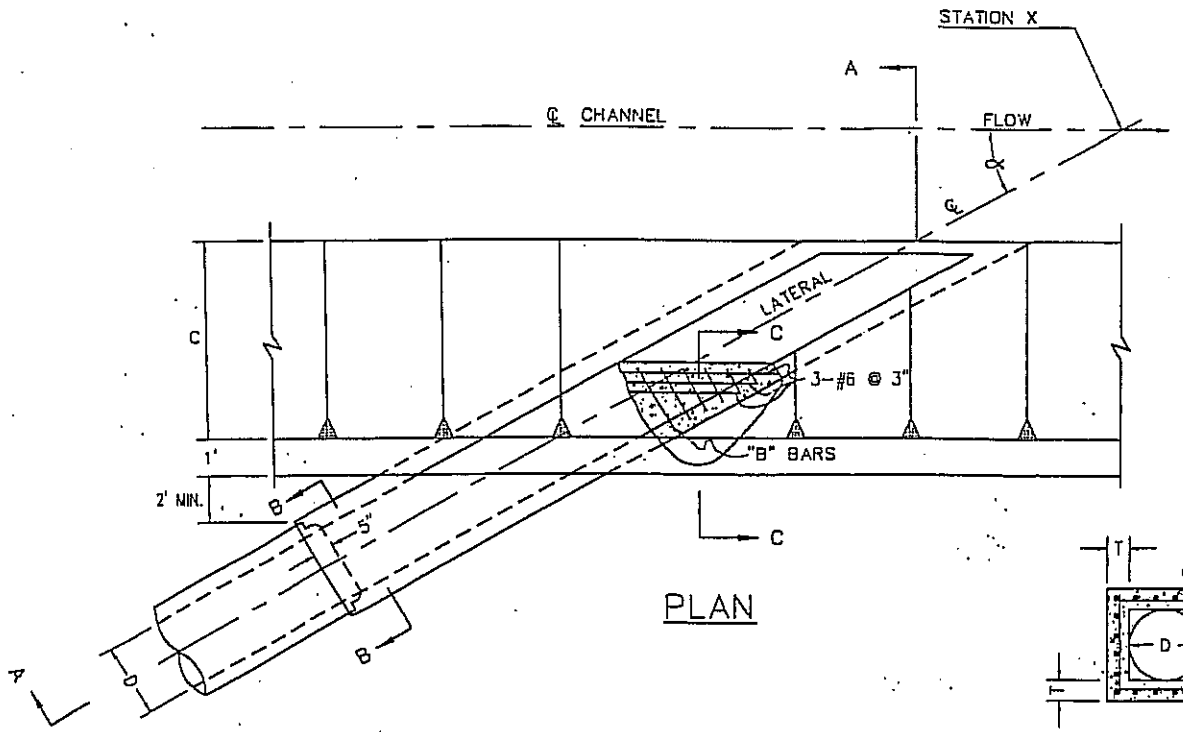

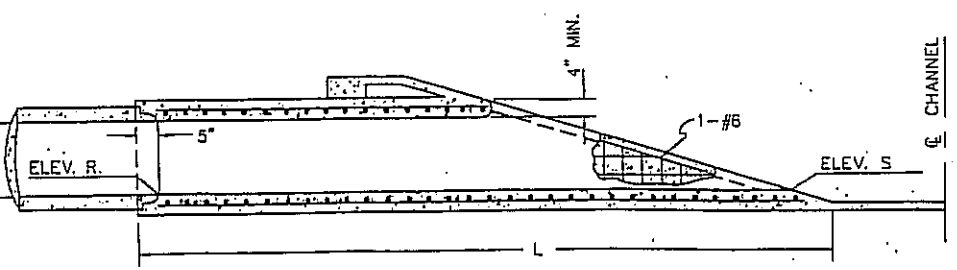

SECTION A-A

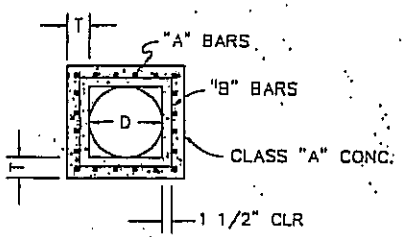

SECTION B-B

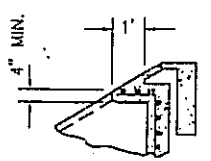

SECTION C-C

NOTES:

1. VALUES FOR C, D, L, ELEV. S, ELEV. R, α AND STA. X ARE SHOWN ON PROJECT DRAWINGS.
2. REINFORCING STEEL SHALL BE STRAIGHT BARS 1.5" CLEAR FROM FACE OF CONCRETE.

TABLE FOR DIMENSIONS AND BAR SIZES

D (IN.)	T (IN.)	A BARS	B BARS
18	4.5	#4 @ 6"	#4 @ 6"
21	5		
24	5.25		
27	5.5		
30	6		
33	6.25		
36	6.5		
39	7		
42	7.5	#5 @ 6"	#5 @ 6"
45	7.75		
48	8		
51	8.5		
54	9		
57	9.25		
60	9.5		

REGISTERED PROFESSIONAL ENGINEER ROBERT K. HOLT No. 27943 EXPIRES 03-31-98 CIVIL STATE OF CALIFORNIA

APPROVED: _____ DATE _____

APPROVED: TOWN ENGINEER Robert K. Holt R.C.E. 27943

REVISION	BY	DATE

Town of Yucca Valley

JUNCTION STRUCTURE NO. 5

STANDARD DRAWING NO. 414

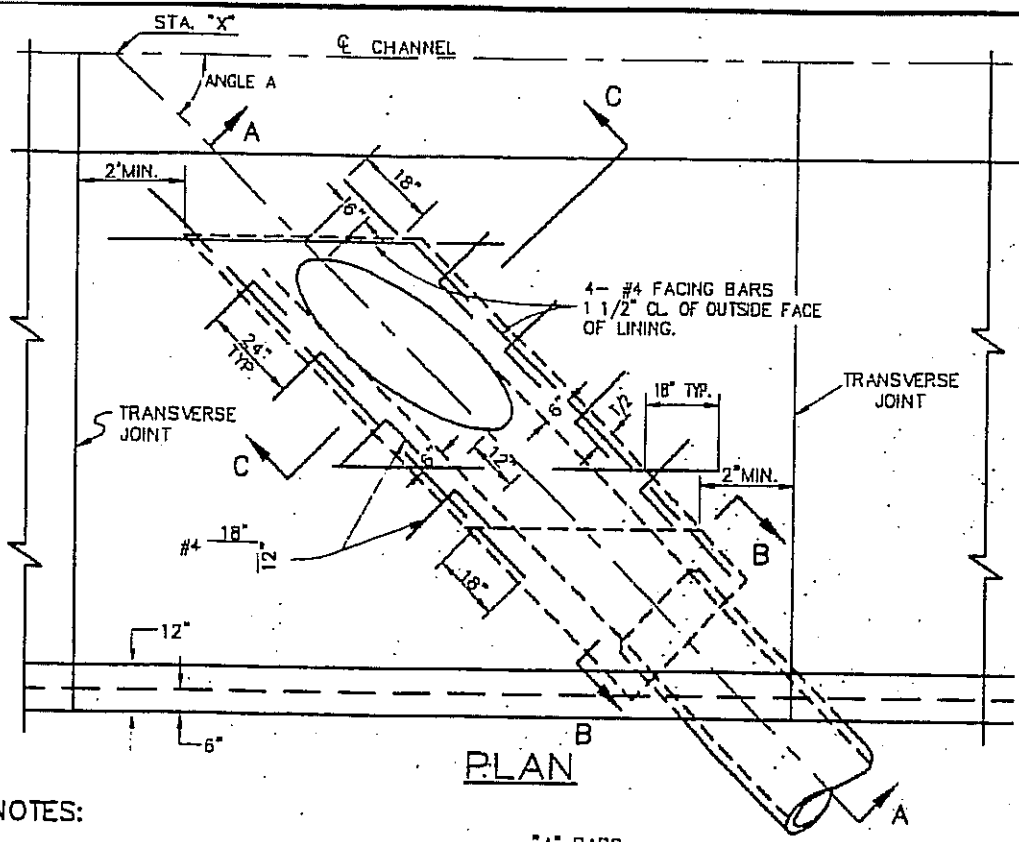

PLAN

TABLE

FOR DIMENSIONS AND BAR SIZES

D (IN)	T (IN)	"A" BARS
18	9	NO LONGITUDINAL OR "A" BARS
21	9	
24	9	
27	9	
30	9	
33	7	#4 @ 6"
36	7	
39	7	
42	8	#5 @ 6"
45	8	
48	8	
51	9	
54	9	
57	10	
60	10	
63	10	
66	11	
69	11	
72	11	
78	12	
84	13	

NOTES:

1. VALUES FOR D, L, C, EL. R, EL. S, ANGLE A AND STA. "X" ARE TO BE SHOWN ON PROJECT DRAWINGS.
2. REINFORCING BARS SHALL BE PLACED 1 1/2" CLEAR FROM FACE OF CONCRETE.
3. CONCRETE SHALL BE CLASS "B".
4. PLACE #4–12"x18" BARS WITH SHORT LEG HORIZONTAL IN VERTICAL J.S. WALL. ROTATE LONGER LEG INTO CENTER OF SLOPE PAVING.
5. REINFORCEMENT SHALL BE PROVIDED IN ALL PORTIONS OF THE JUNCTION STRUCTURE AS INDICATED ON DRAWINGS REGARDLESS OF BAR LENGTH MODIFICATIONS REQUIRED TO ACHIEVE PROPER CLEARANCES.

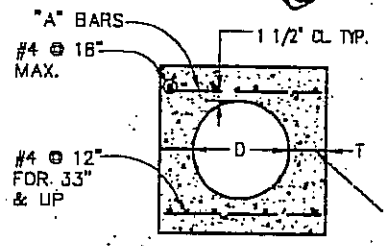

SECTION B–B

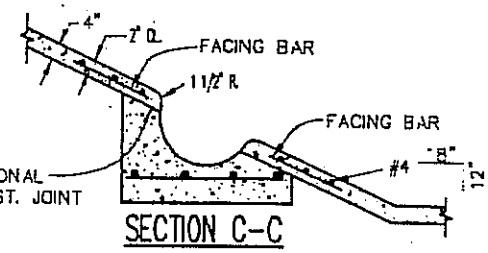

SECTION C–C

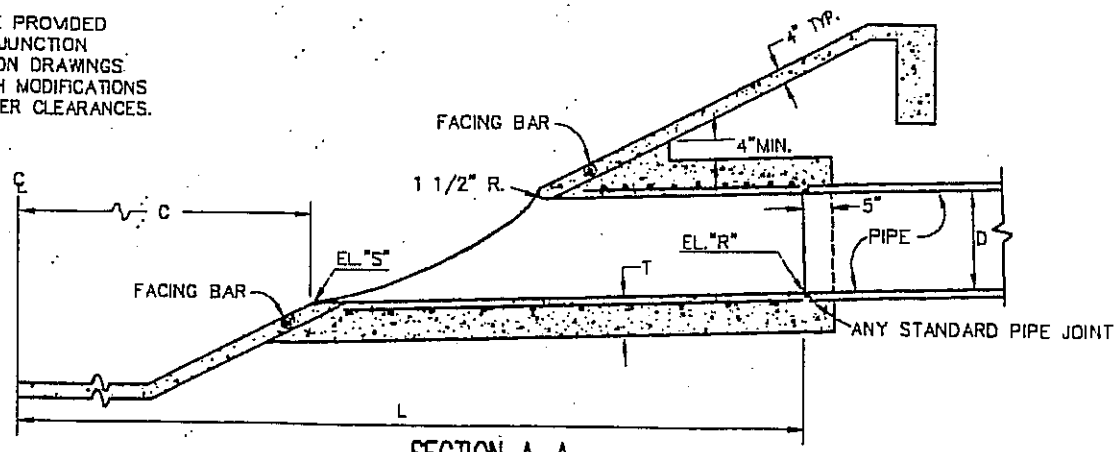

SECTION A–A

REGISTERED PROFESSIONAL ENGINEER
ROBERT K. HOLT
No.27943
EXPIRES 03-31-98
CIVIL
STATE OF CALIFORNIA

APPROVED:

DATE

APPROVED: TOWN ENGINEER

Robert K. Holt R.C.E. 27943

REVISION	BY	DATE

Town of Yucca Valley

JUNCTION STRUCTURE
NO. 6

STANDARD DRAWING NO. 415

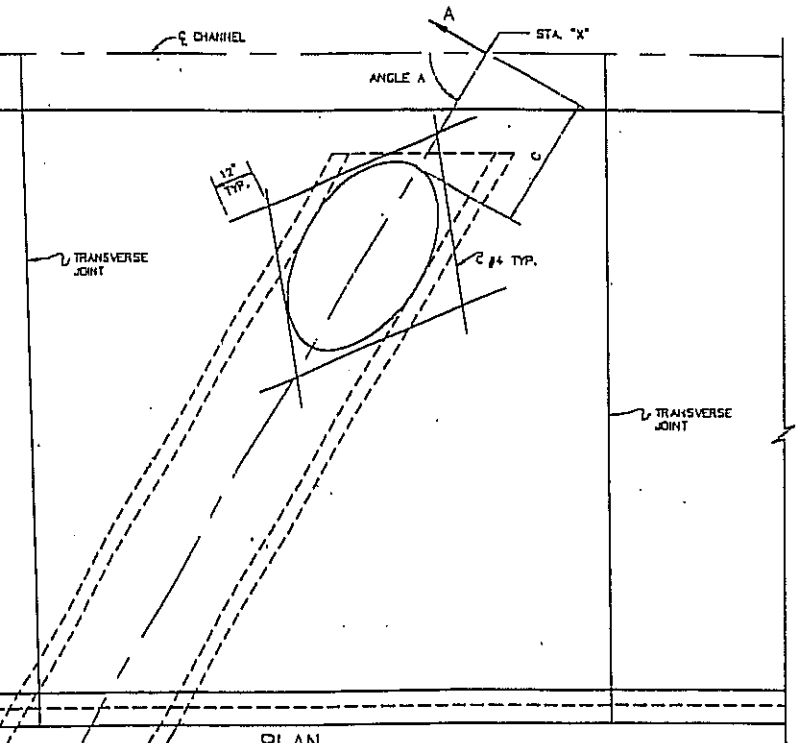

PLAN

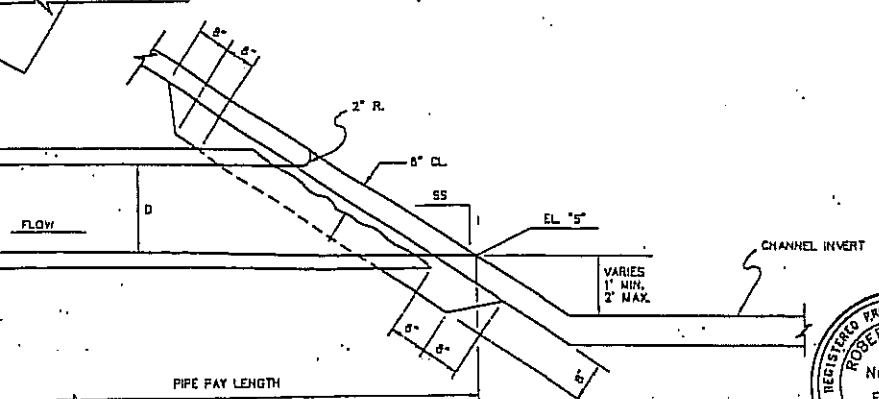

SECTION A–A
(CASE 1)

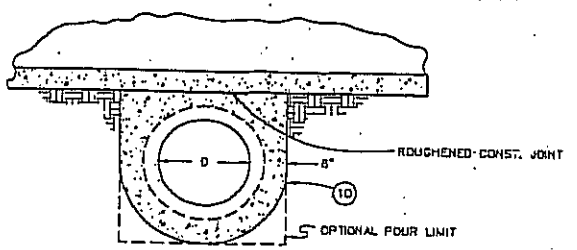

SECTION B–B

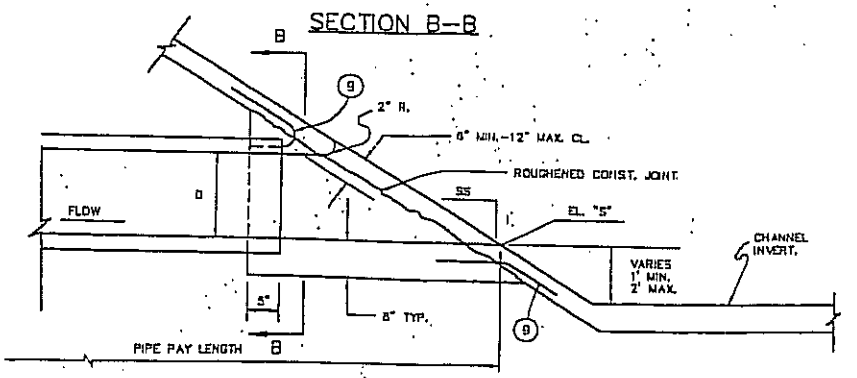

SECTION A–A
(CASE 2)

NOTES:

1. THE CONTRACTOR HAS THE OPTION TO CONSTRUCT CASE 1 OR CASE 2 UNLESS OTHERWISE NOTED.
2. HORIZONTAL ANGLE OF CONFLUENCE, "A" MUST BE BETWEEN 60° AND 90°.
3. VALUES FOR D, SS, 'A, C, EL."S", AND STA. "X" SHALL BE SHOWN ON PROJECT DRAWINGS.
4. D SHALL NOT EXCEED 24".
5. SIDE SLOPE, SS, SHALL NOT BE FLATTER THAN 2:1.
6. ALL CONCRETE SHALL BE CLASS B.
7. JUNCTION STRUCTURE NO. 7 TO BE USED ON TRAPEZOIDAL CHANNELS ONLY.
8. CASE 1 SHALL BE MONOLITHICALLY POURED WITH CHANNEL AND CASE 2 SHALL BE POURED SEPARATE FROM THE CHANNEL.

(9) 4–#4 X 2' TIES SPACED EQUALLY, TYP.

REGISTERED PROFESSIONAL ENGINEER
ROBERT K. HOLT
No.27943
EXPIRES 03-31-98
CIVIL
STATE OF CALIFORNIA

APPROVED: _____ DATE _____

APPROVED: TOWN ENGINEER
Robert K. Holt R.C.E. 27943

REVISION	BY	DATE

Town of Yucca Valley

JUNCTION STRUCTURE
NO. 7

STANDARD DRAWING NO. 416

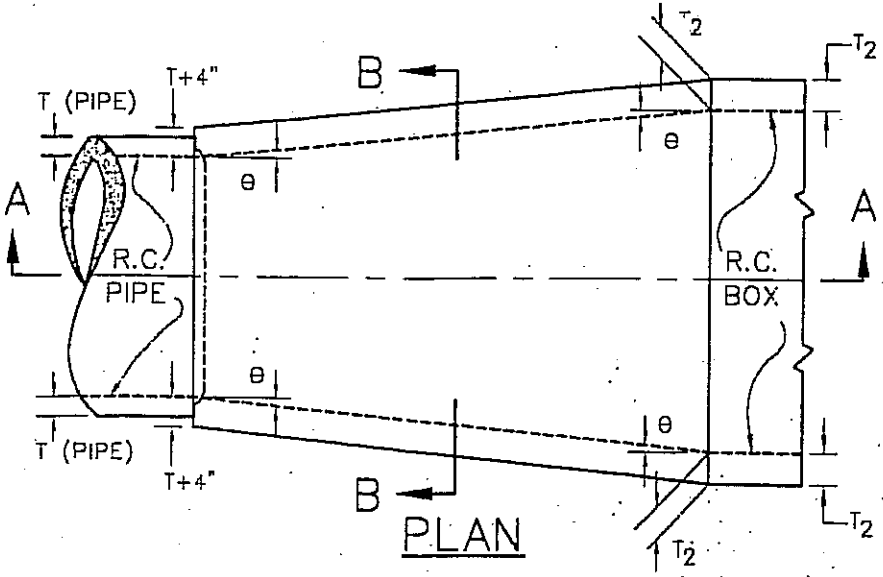

PLAN

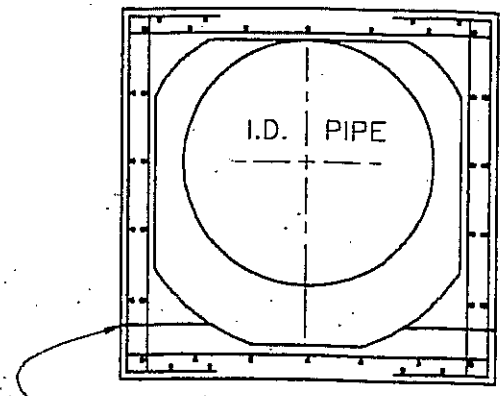

OPTIONAL CONSTRUCTION JOINT

SECTION B–B

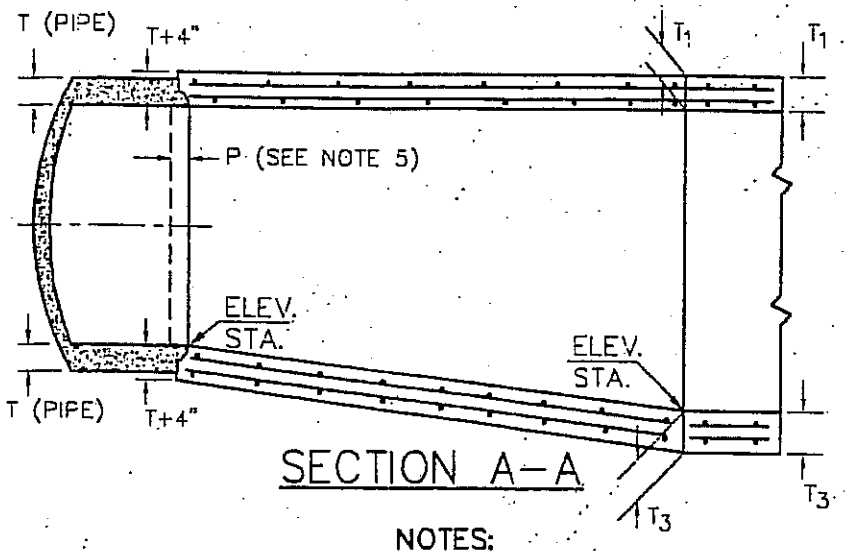

SECTION A–A

NOTES:

1. THE HORIZONTAL ANGLE OF DIVERGENCE OR CONVERGENCE, θ, SHALL NOT EXCEED 5° 45'.
2. REINFORCING STEEL BAR SIZES, SPACING, PATTERN AND COVER OVER THE STEEL SHALL BE THAT OF THE BOX SECTION. THE BAR LENGTHS SHALL VARY UNIFORMLY THROUGHOUT THE TRANSITION.
3. THE CONCRETE THICKNESS SHALL BE THAT OF THE BOX SECTION UNLESS THE WALL THICKNESS OF THE PIPE PLUS 4 INCHES IS GREATER, IN WHICH CASE THE CONCRETE THICKNESS SHALL VARY UNIFORMLY FROM THAT OF THE BOX SECTION TO THAT OF THE PIPE WALL PLUS 4 INCHES.
4. THE INTERIOR SURFACE SHALL BE SMOOTH AND VARY UNIFORMLY BETWEEN THE TWO ADJOINING SECTIONS.
5. AT THE PIPE JUNCTURE, EMBEDMENT P SHALL BE 5 INCHES FOR PIPE SIZES OF 96 INCHES OR LESS, AND 8 INCHES FOR PIPE OVER 96 INCHES.
6. CONSTRUCTION JOINTS OF THE SAME DIMENSIONS AS THOSE OF THE BOX MAY BE CARRIED THROUGH THE TRANSITION STRUCTURE AT CONTRACTOR'S OPTION. SEE SEC. B–B ABOVE.
7. THE TRANSITION STRUCTURE SHALL BE CONSTRUCTED IN ACCORDANCE WITH THE GENERAL CONSTRUCTION NOTES APPLYING TO BOX AS SHOWN ON THE PROJECT DRAWINGS.
8. STRUCTURAL CONCRETE SHALL BE CLASS "A".

REGISTERED PROFESSIONAL ENGINEER
ROBERT K. HOLT
No.27943
EXPIRES
03-31-98
CIVIL
STATE OF CALIFORNIA

APPROVED:

DATE

APPROVED: TOWN ENGINEER

Robert K. Holt R.C.E. 27943

REVISION	BY	DATE

Town of Yucca Valley

TRANSITION STRUCTURE
NO. 1

STANDARD DRAWING NO. 420

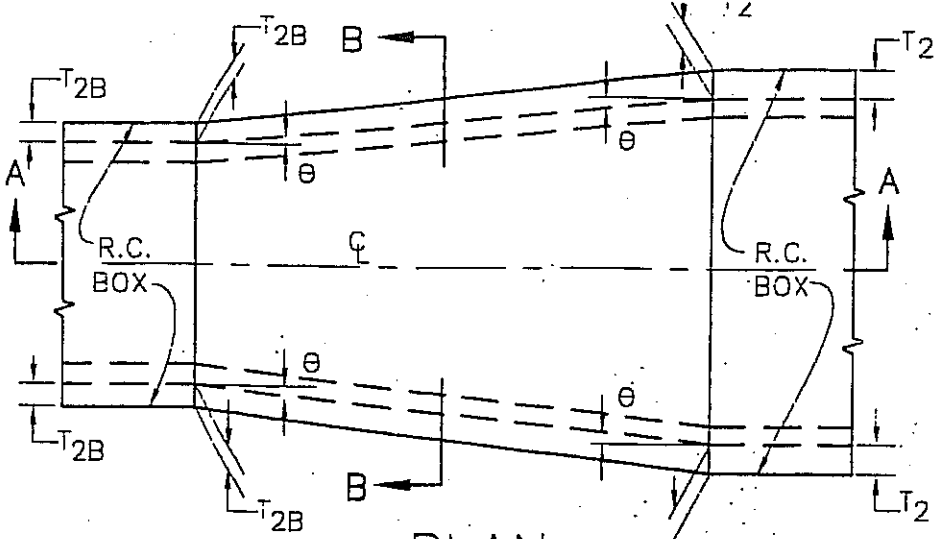

PLAN

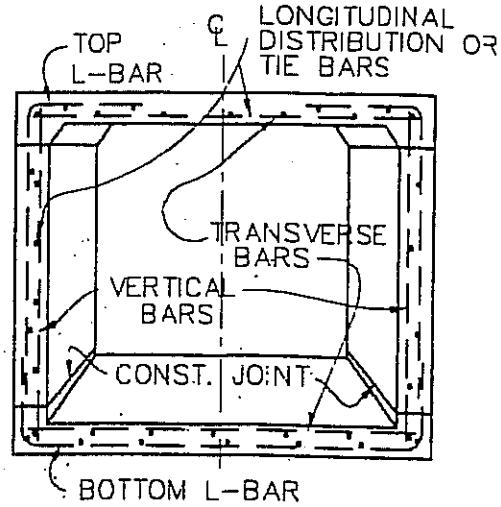

SECTION B-B

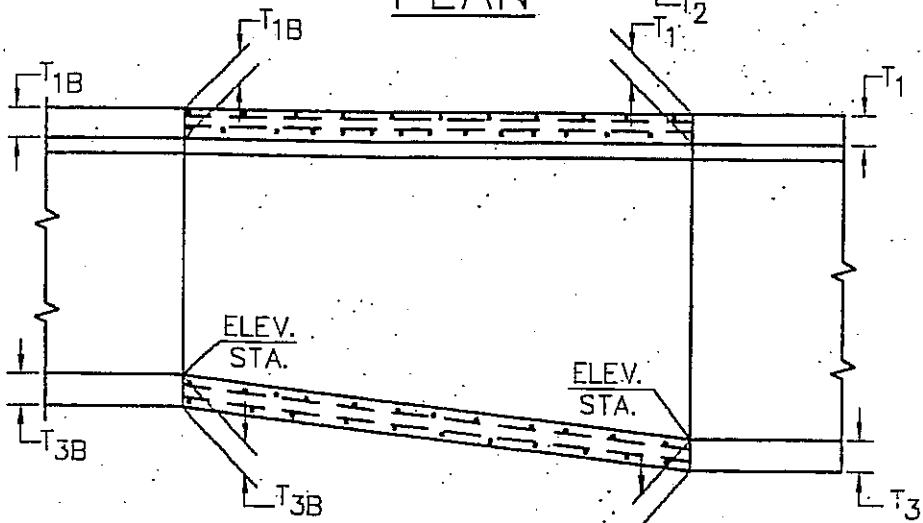

SECTION A-A

NOTES:

1. THE HORIZONTAL ANGLE OF DIVERGENCE OR CONVERGENCE, θ SHALL NOT EXCEED 5°45'.
2. THE REINFORCING STEEL BAR SIZE, SPACING AND COVER OVER THE STEEL OF STRAIGHT TRANSVERSE BARS IN TOP OR BOTTOM SLABS, OF L-BARS IN TOP OR BOTTOM CORNERS, OF STRAIGHT VERTICAL BARS IN SIDE WALLS, AND OF LONGITUDINAL DISTRIBUTION AND TIE BARS IN TOP OR BOTTOM SLABS OR SIDE WALLS SHALL BE THOSE OF WHICHEVER ADJOINING BOX SECTION PROVIDES THE GREATER STEEL AREA FOR EACH TYPE OF BAR. THE BAR LENGTH SHALL VARY UNIFORMLY THROUGHOUT THE TRANSITION.
3. THE THICKNESS OF THE WALLS AND SLABS SHALL BE THOSE OF THE ADJOINING BOX SECTION AT EACH OF THE TRANSITION AND SHALL VARY UNIFORMLY BETWEEN THE TWO ENDS.
4. STRUCTURAL CONCRETE SHALL BE CLASS "A".
5. THE TRANSITION STRUCTURE SHALL BE CONSTRUCTED IN ACCORDANCE WITH THE GENERAL STRUCTURAL NOTES APPLYING TO BOX STRUCTURES, SHOWN ON THE PROJECT DRAWINGS.
6. DETAILS OF CONSTRUCTION JOINTS SHALL BE AS SHOWN ON THE PROJECT DRAWINGS FOR SINGLE BARREL BOX STRUCTURES.

REGISTERED PROFESSIONAL ENGINEER
ROBERT K. HOLT
No.27943
EXPIRES
03-31-98
CIVIL
STATE OF CALIFORNIA

APPROVED:

DATE

APPROVED: TOWN ENGINEER

Robert K. Holt R.C.E. 27943

REVISION	BY	DATE

Town of Yucca Valley

TRANSITION STRUCTURE
NO. 2

STANDARD DRAWING NO. 421

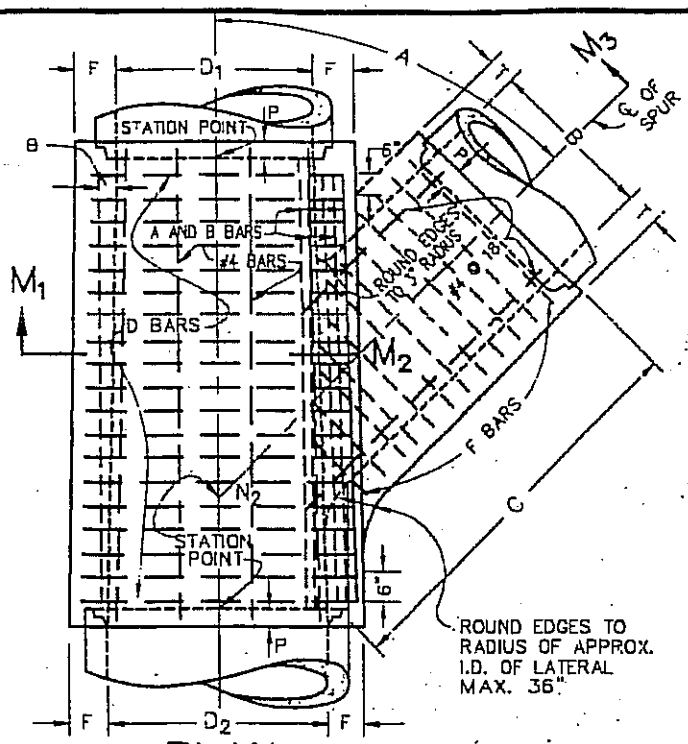

PLAN

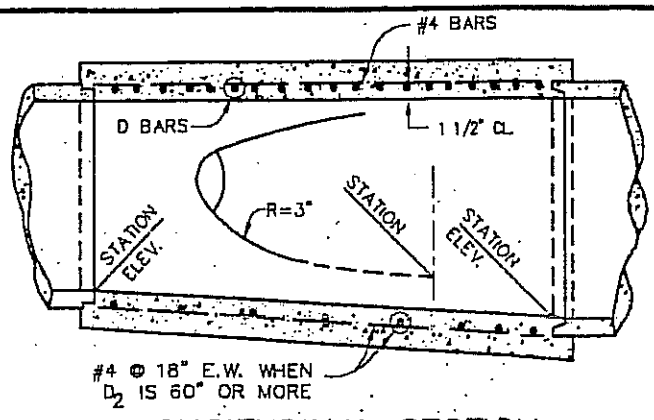

LONGITUDINAL SECTION

* USE D_2 OR D_1; WHICHEVER IS GREATER, OR B.

TABLE

FOR DIMENSIONS AND BAR SIZE

* D_2, D_1 OR B	C OR T	A OR B BARS	D OR F. BARS	P
12	4			
15	4 1/4			
18	4 1/2			
21	5			
24	5 1/4	#5 @ 3	#4 @ 6	
27	5 1/2			
30	6			
33	6 1/4			
36	6 1/2			
39	7			
42	7 1/2			
45	7 3/4			
48	8			
51	8 1/2			
54	9			
57	9 1/4			5"
60	9 1/2	#6 @ 3	#5 @ 6	
63	10			
66	10 1/4			
69	10 3/4			
72	11			
78	11 3/4			
84	12 1/2			
90	13 1/4			
96	14			
102	15 1/2			
108	16			
114	16 1/2			
120	17	#7 @ 3	#6 @ 6	
126	17			8"
132	17 1/2			
138	17 1/2			
144	18			

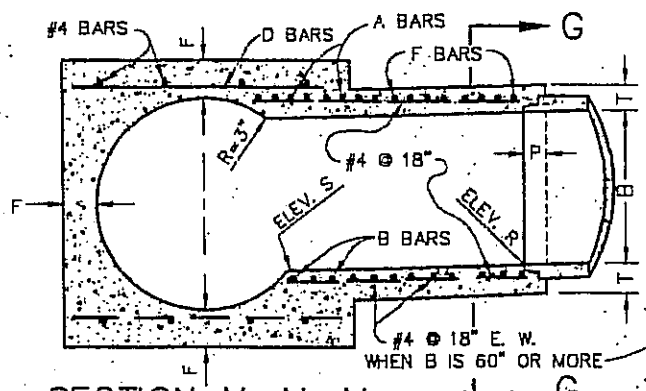

SECTION M_1, M_2, M_3

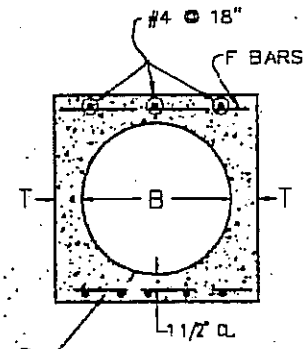

SECT. G–G

NOTES:

1. THE HORIZONTAL ANGLE OF DIVERGENCE OR CONVERGENCE, θ, SHALL NOT EXCEED 5°45'.
2. VALUES FOR A, B, C, D_1, D_2, ELEV. R AND ELEV. S ARE SHOWN ON IMPROVEMENT PLAN. THE LENGTH OF THE STRUCTURE MAY BE INCREASED TO MEET PIPE ENDS USING D BARS IN EXTENDED PORTION OF SAME DIAMETER AND SPACING AS SPECIFIED.
3. CONCRETE SHALL BE CLASS "A". FLOOR OF THE STRUCTURE SHALL BE STEEL-TROWELED TO SPRING LINE. STRUCTURE SHALL BE POURED IN ONE CONTINUOUS OPERATION, EXCEPT THAT THE CONTRACTOR SHALL HAVE THE OPTION OF PLACING AT THE SPRING LINE A CONSTRUCTION JOINT WITH A LONGITUDINAL KEYWAY.
4. REINFORCING STEEL CLEAR COVER SHALL BE 1 1/2" ON INSIDE. TIE BARS SHALL BE NO. 4 AND SPACED 18" O.C.
5. WHEN DIMENSION C IS NOT SPECIFIED THE SPUR SHALL NOT BE CONSTRUCTED AND A AND B BARS SHALL BE OMITTED.

REGISTERED PROFESSIONAL ENGINEER
ROBERT K. HOLT
No. 27943
EXPIRES 03-31-98
CIVIL
STATE OF CALIFORNIA

APPROVED: _____ DATE _____

APPROVED: TOWN ENGINEER
Robert K. Holt R.C.E. 27943

REVISION	BY	DATE

Town of Yucca Valley

TRANSITION STRUCTURE
NO. 3

STANDARD DRAWING NO. 422

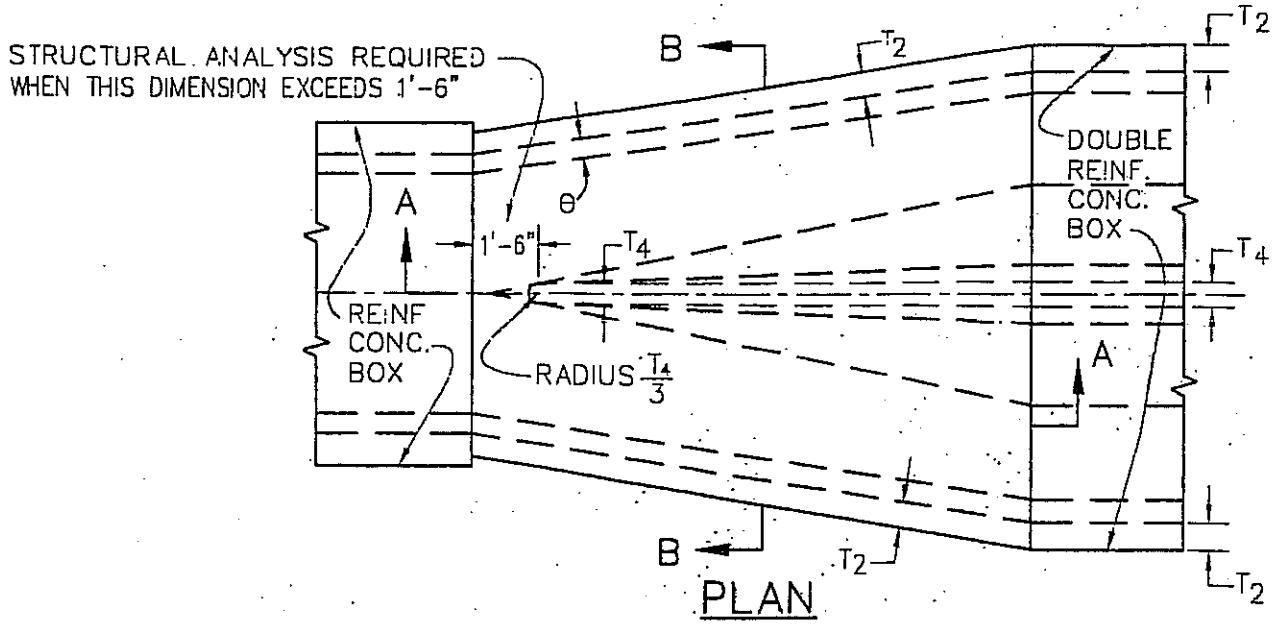

PLAN

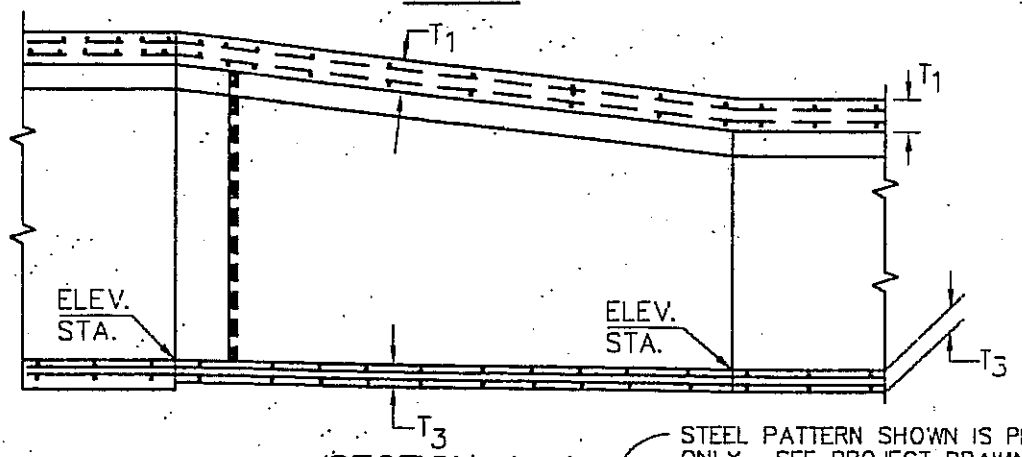

SECTION A–A

STEEL PATTERN SHOWN IS PICTORIAL ONLY. SEE PROJECT DRAWINGS FOR ACTUAL STEEL LAYOUT.

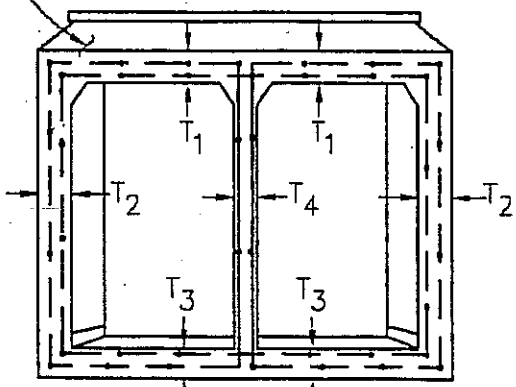

SECTION B–B

NOTES:

1. THE HORIZONTAL ANGLE OF DIVERGENCE OR CONVERGENCE, θ SHALL NOT EXCEED 5° 45'.
2. REINFORCING STEEL BAR SIZE, SPACING AND OUTSIDE COVER SHALL BE THAT OF DOUBLE BOX SECTION. FOR CURVED TRANSITIONS, SPACE BARS ON CENTERLINE AND PLACE TRANSVERSE STEEL RADIALLY. THE BAR LENGTHS AND DIMENSIONS SHALL VARY UNIFORMLY THROUGHOUT TRANSITION. LONGITUDINAL BARS SHALL BE CONTINUED THROUGH JOINTS WITH THE TRANSITION STRUCTURE.
3. THE CONCRETE THICKNESS SHALL BE THAT OF THE DOUBLE BOX SECTION.
4. PLAN AS SHOWN IS FOR DOUBLE BOX SECTION DOWNSTREAM. WHEN DOUBLE BOX SECTION IS UPSTREAM, TAPER THE LAST 2 FT. OF CENTER WALL TO END IN 1-1/2 INCH RADIUS.
5. STRUCTURAL CONCRETE SHALL BE CLASS "A".
6. TRANSVERSE JOINT KEYWAYS AS DETAILED FOR LONGITUDINAL JOINT KEYWAYS AT BASE OF OUTER WALLS ON THE PROJECT DRAWINGS, SHALL BE PLACED IN BOTH SLABS AND WALLS AT THE END OF EACH POUR.

REGISTERED PROFESSIONAL ENGINEER
ROBERT K. HOLT
No.27943
EXPIRES 03-31-98
CIVIL
STATE OF CALIFORNIA

APPROVED: _____ DATE _____

APPROVED: TOWN ENGINEER Robert K. Holt R.C.E. 27943

REVISION	BY	DATE

Town of Yucca Valley

TRANSITION STRUCTURE NO. 4

STANDARD DRAWING NO. 423

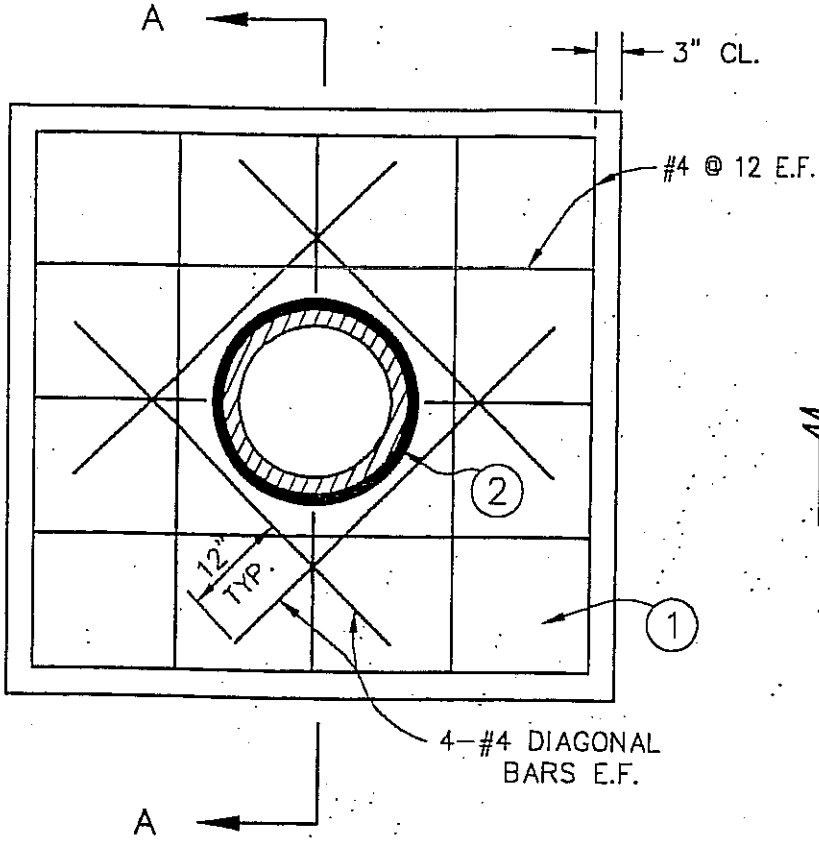

TYPICAL SECTION

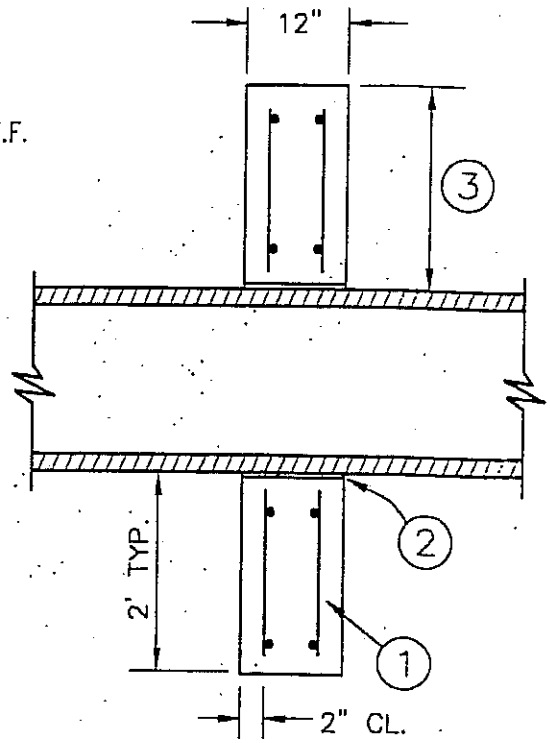

SECTION A-A

CONNECTOR PIPE COLLAR

NOTES:

1. CONCRETE SHALL BE CLASS "B" CONCRETE.
2. 1/2" PREFORMED BITUMINOUS JOINT MATERIAL.
3. 2' WITH MIN. 6" BELOW GRADE OR AS DIRECTED BY ENGINEER.

REGISTERED PROFESSIONAL ENGINEER
ROBERT K. HOLT
No.27943
EXPIRES 03-31-98
CIVIL
STATE OF CALIFORNIA

APPROVED: _____ DATE _____

APPROVED: TOWN ENGINEER Robert K. Holt R.C.E. 27943

REVISION	BY	DATE

Town of Yucca Valley

CONNECTOR PIPE COLLAR

STANDARD DRAWING NO. 430

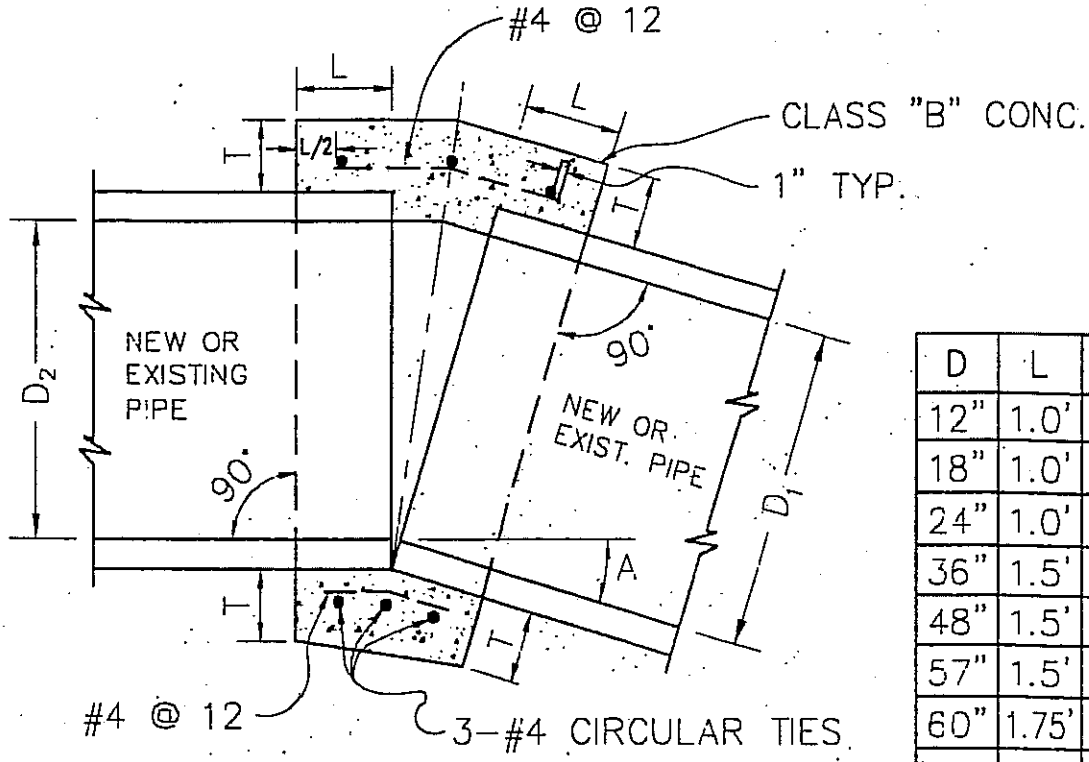

D	L	T
12"	1.0'	4"
18"	1.0'	5"
24"	1.0'	6"
36"	1.5'	8"
48"	1.5'	10"
57"	1.5'	10"
60"	1.75'	11"
66"	1.75'	11"

NOTES:

1. A CONCRETE COLLAR IS REQUIRED WHERE THE CHANGE IN GRADE EXCEEDS 0.10 FT. PER FOOT, OR IF CHANGE IN ALIGNMENT EXCEEDS 0.10 FT PER FOOT.
2. WHERE PIPES OF DIFFERENT DIAMETERS ARE JOINED WITH A CONCRETE COLLAR, L AND T SHALL BE THOSE OF THE LARGER PIPE. $D=D_1$ OR D_2 WHICHEVER IS GREATER.
3. FOR PIPE LARGER THAN 66" A SPECIAL COLLAR DETAIL IS REQUIRED.
4. FOR PIPE SIZE NOT LISTED USE NEXT SIZE LARGER.
5. OMIT REINFORCING ON PIPES 24" AND LESS IN DIAMETER AND ON ALL PIPES WHERE ANGLE "A" IS LESS THAN 10°.
6. WHERE REINFORCING IS REQUIRED, THE DIAMETER OF THE CIRCULAR TIES SHALL BE D+(2x WALL THICKNESS)+8".
7. WHEN D_1 IS EQUAL TO OR LESS THAN D_2, JOIN INVERTS AND WHEN D_1 IS GREATER THAN D_2, JOIN SOFFITS.
8. PIPE MAY BE CORRUGATED METAL PIPE, CONCRETE PIPE, OR REINFORCED CONCRETE PIPE.

REGISTERED PROFESSIONAL ENGINEER
ROBERT K. HOLT
No.27943
EXPIRES
03-31-98
CIVIL
STATE OF CALIFORNIA

APPROVED:

DATE

APPROVED: TOWN ENGINEER

Robert K. Holt R.C.E. 27943

REVISION	BY	DATE

Town of Yucca Valley

CONCRETE COLLAR
FOR PIPE 12 INCHES THROUGH
66 INCHES

STANDARD DRAWING NO. 431

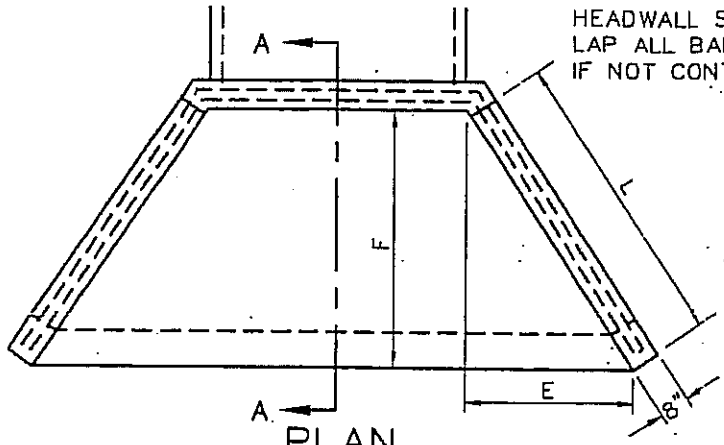

PLAN

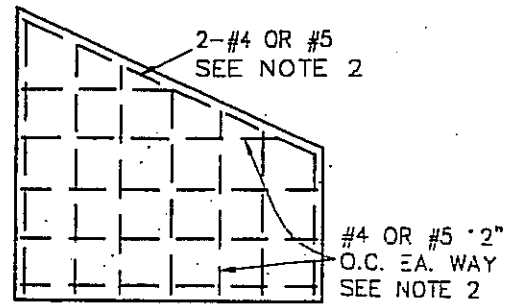

REINFORCING DETAIL

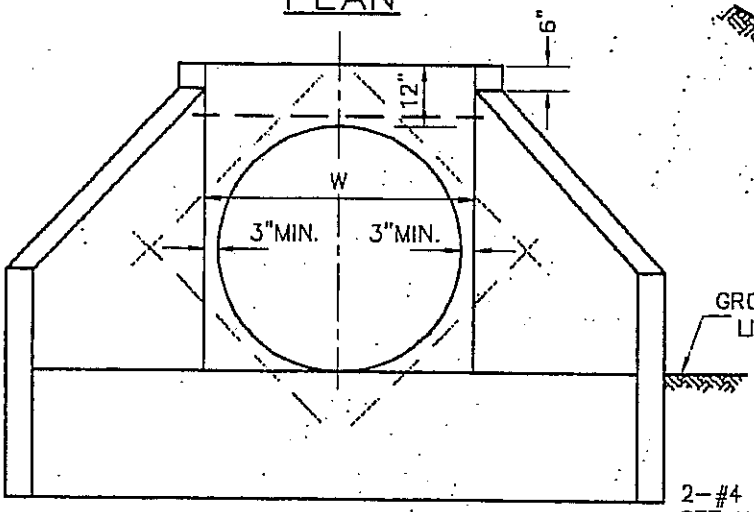

ELEVATION

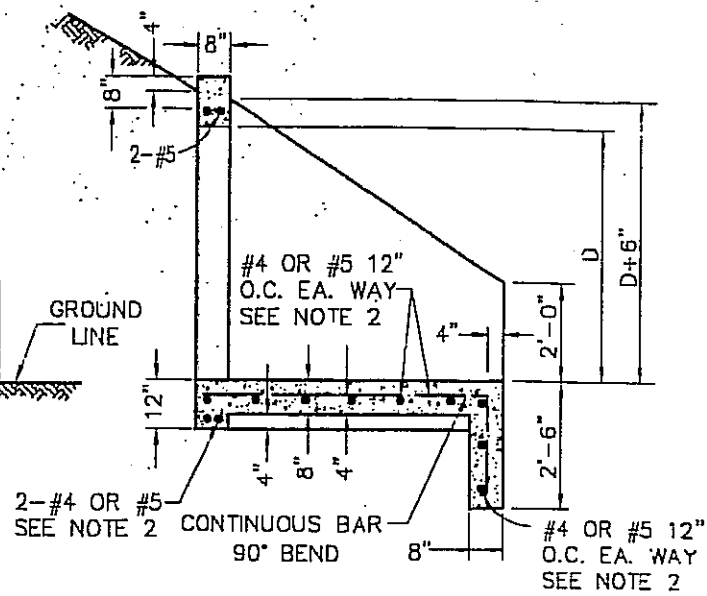

SECTION A-A

DIMENSIONS				
PIPE DIA.	L	E	F	W
24"	4'-9"	2'-8"	4'-0"	2'-6"
30"	5'-5"	3'-0"	4'-6"	3'-0"
36"	6'-0"	3'-4"	5'-0"	3'-8"
42"	6'-7"	3'-8"	5'-6"	4'-2"
48"	7'-3"	4'-0"	6'-0"	4'-10"
54"	8'-2"	4'-6"	6'-9"	5'-4"

NOTES:

1. HEADWALL SHALL BE CONSTRUCTED OF CLASS "A" CONCRETE.
2. REINFORCING STEEL SHALL BE #4 BARS FOR "W" UP TO 60". ABOVE "W"=60" #5 BARS SHALL BE USED. 2" MINIMUM CLEARANCE, 30 DIAMETER LAP, ALL STEEL.
3. ADJACENT SLOPES SHALL BE 1-1/2 TO 1 OR FLATTER.
4. MULTIPLE PIPES TO BE SET WITH LONGITUDINAL CENTERS 1-2/3 DIAMETERS APART.
5. ALL EXPOSED CORNERS TO BE ROUNDED 3/4" RADIUS.
6. W SHALL BE INCREASED WHEN MULTIPLE PIPES OR PIPES ON SKEW ARE USED.

REGISTERED PROFESSIONAL ENGINEER
ROBERT K. HOLT
No.27943
EXPIRES
03-31-98
CIVIL
STATE OF CALIFORNIA

APPROVED:

DATE

APPROVED: TOWN ENGINEER

Robert K. Holt R.C.E. 27943

REVISION	BY	DATE

Town of Yucca Valley

HEADWALL
WING - TYPE

STANDARD DRAWING NO. 440

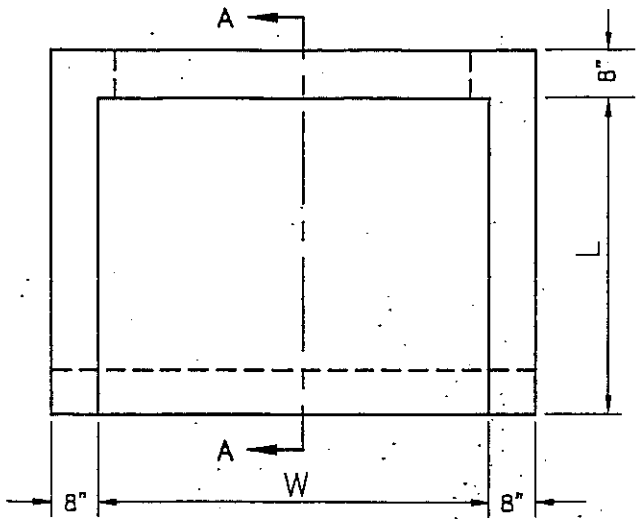

PLAN

DIMENSIONS		
PIPE DIA.	L	W
24"	4'-0"	2'-6"
30"	4'-6"	3'-0"
36"	5'-0"	3'-8"
42"	5'-6"	4'-2"
48"	6'-0"	4'-10"
54"	6'-9"	5'-4"

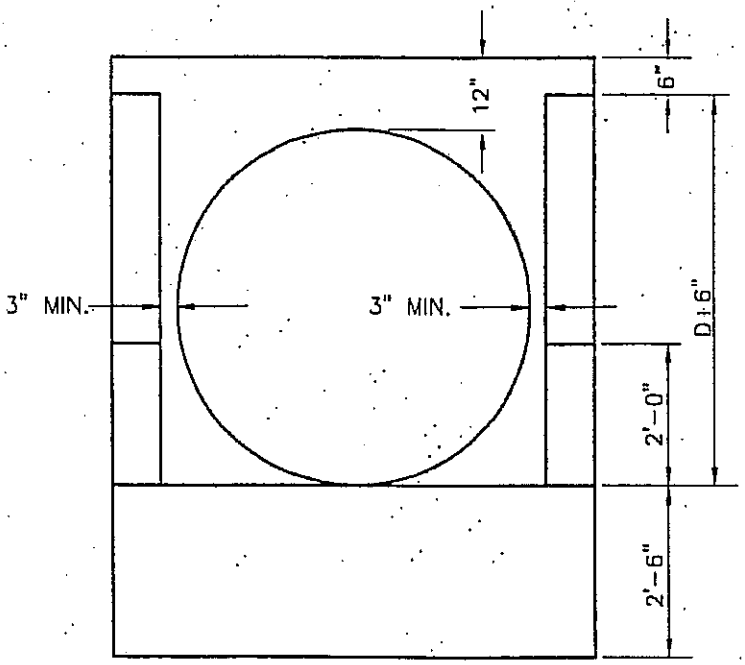

ELEVATION

REGISTERED PROFESSIONAL ENGINEER
ROBERT K. HOLT
No.27943
EXPIRES
03-31-98
CIVIL
STATE OF CALIFORNIA

NOTES:

1. REINFORCING STEEL IN WALLS AND BASE SHALL BE THE SAME AS STD. NO. 440.
2. NOTES SHALL BE THE SAME AS STD. NO. 440.
3. SECTION A-A IS THE SAME AS STD. NO. 440.

APPROVED: _____ DATE _____

APPROVED: TOWN ENGINEER Robert K. Holt R.C.E. 27943

REVISION	BY	DATE

Town of Yucca Valley

HEADWALL
"U" – TYPE

STANDARD DRAWING NO. 441

NOTE: 12" OF AGGREGATE BASE REQUIRED ON GRADED ROADS.

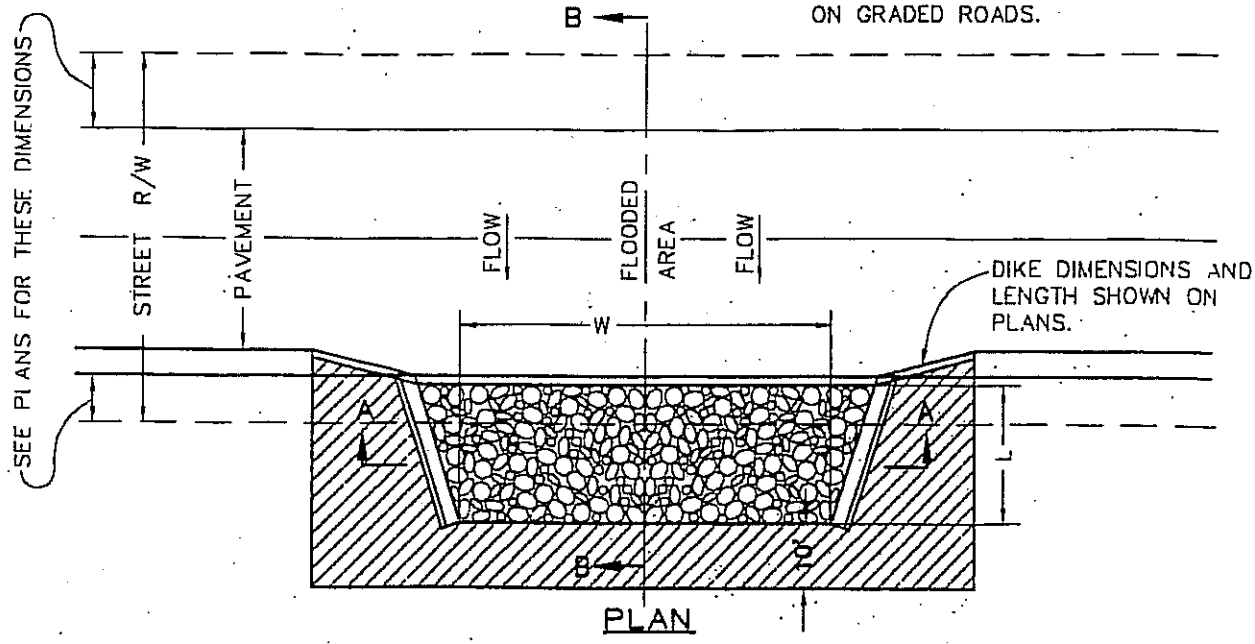

PLAN

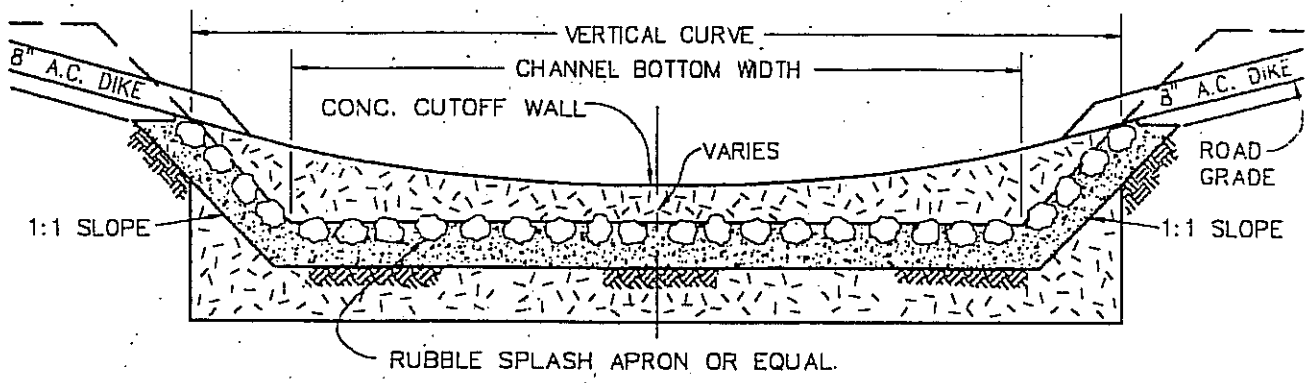

SECTION A–A

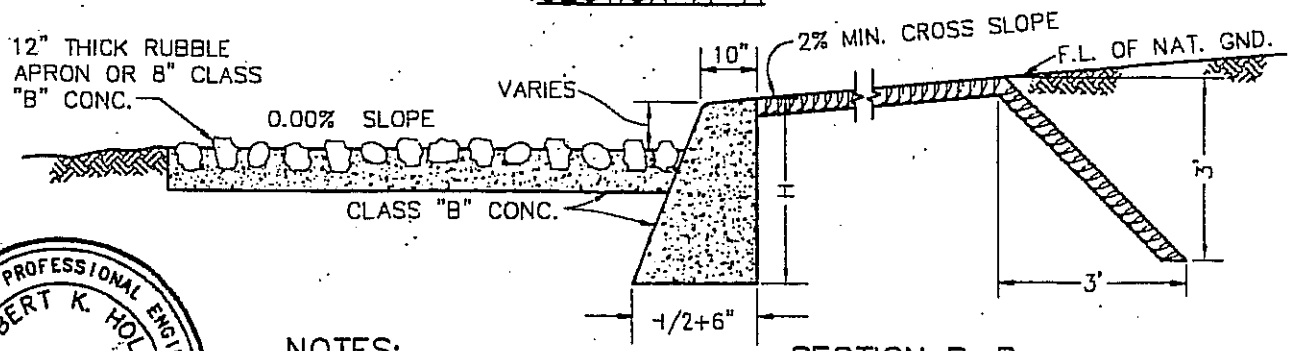

SECTION B–B

REGISTERED PROFESSIONAL ENGINEER
ROBERT K. HOLT
No.27943
EXPIRES 03-31-98
CIVIL
STATE OF CALIFORNIA

NOTES:

1. ALL CONCRETE TO BE CLASS "B".
2. L= SHOWN ON PLANS, H= 3' MIN., 6' MAX.
3. DRAINAGE EASEMENT REQUIRED.
4. AREA SHOWN THUS ▨ SHALL BE COMPACTED TO 90% RELATIVE DENSITY.
5. REINFORCED BLOCK WALL AND FOOTING PERMITTED.

APPROVED: _____ DATE _____

APPROVED: TOWN ENGINEER Robert K. Holt R.C.E. 27943

REVISION	BY	DATE

Town of Yucca Valley

CUTOFF WALL FOR DRAINAGE CHANNEL

STANDARD DRAWING NO. 450

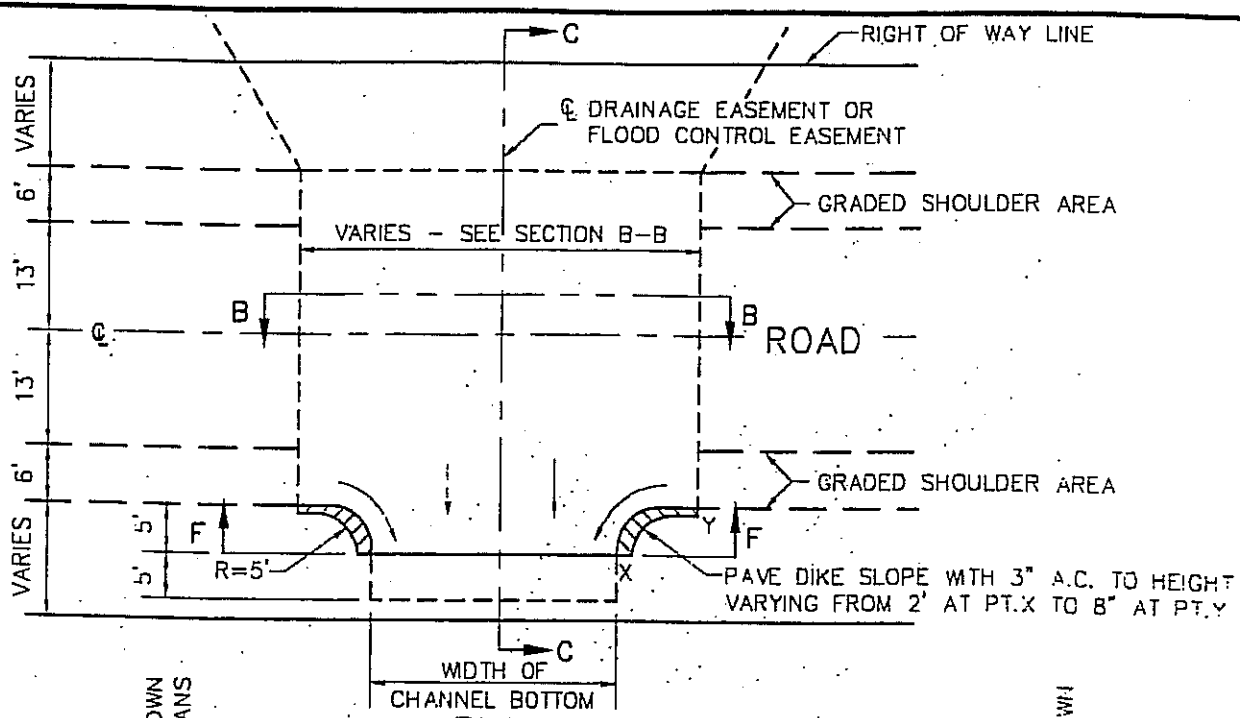

PLAN

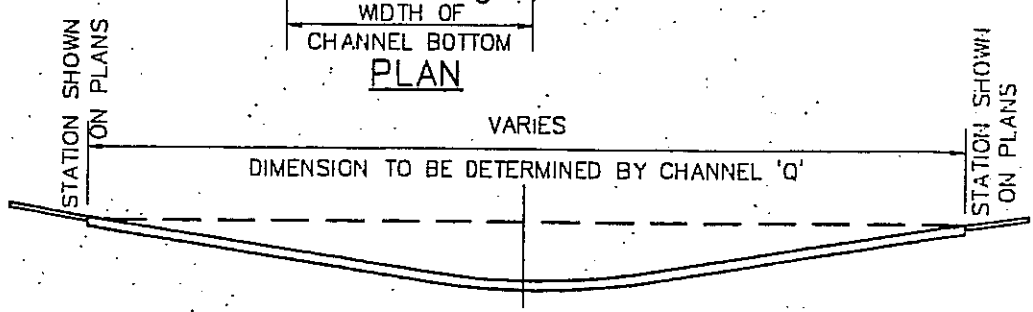

SECTION B-B

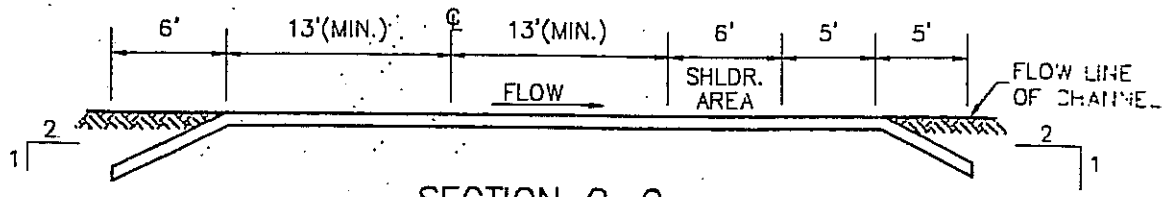

SECTION C-C

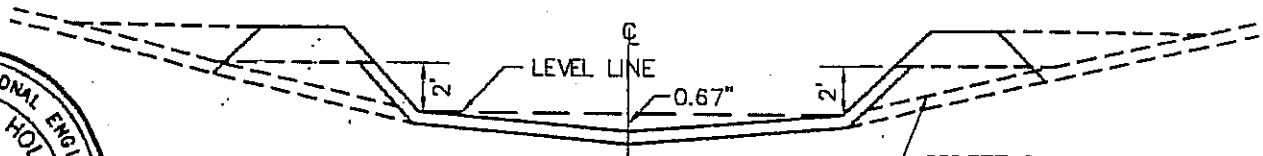

SECTION F-F

REGISTERED PROFESSIONAL ENGINEER
ROBERT K. HOLT
No.27943
EXPIRES
03-31-98
CIVIL
STATE OF CALIFORNIA

NOTE:

PAVEMENT SHALL BE CONSTRUCTED OF 3" MIN. THICK AR4000 ASPHALT CONCRETE.

APPROVED: _____ DATE _____

APPROVED: TOWN ENGINEER Robert K. Holt R.C.E. 27943

REVISION	BY	DATE

Town of Yucca Valley

CHANNEL CROSSING

STANDARD DRAWING NO. 451

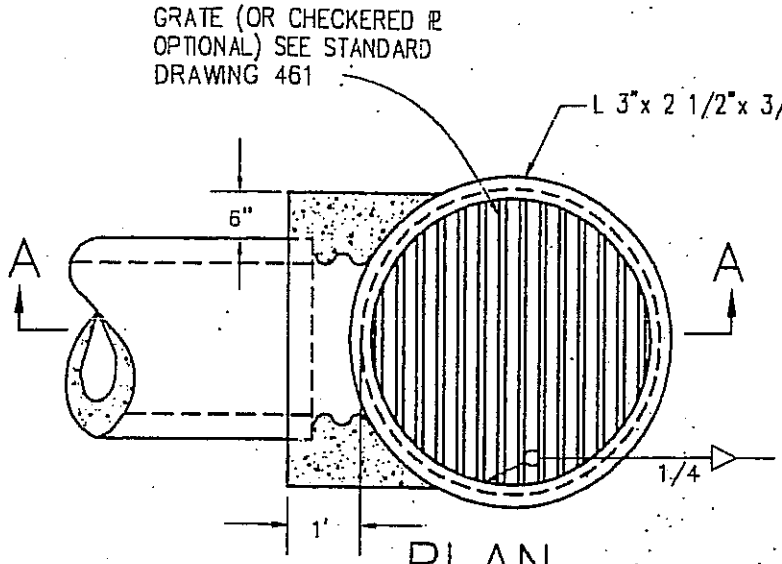

PLAN

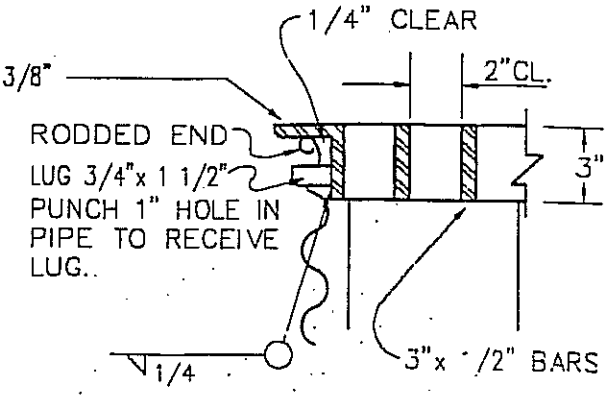

DETAIL "B"

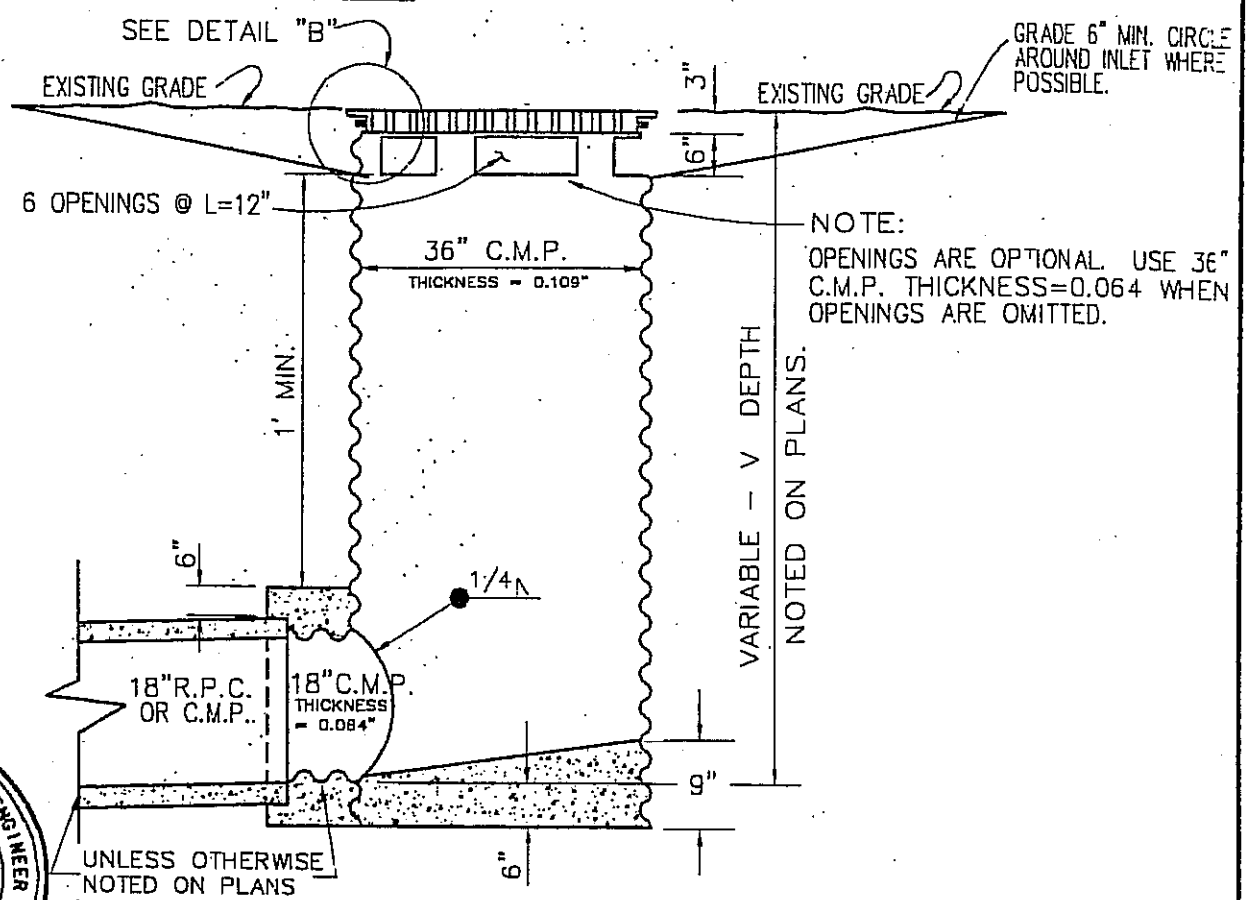

SECTION A–A

REGISTERED PROFESSIONAL ENGINEER
ROBERT K. HOLT
No.27943
EXPIRES 03-31-98
CIVIL
STATE OF CALIFORNIA

NOTES:

1. PLACE GRATE BARS PARALLEL TO FLOW.
2. GRATE AND FRAME SHALL BE GALVANIZED.

APPROVED: _____ DATE _____

APPROVED: TOWN ENGINEER Robert K. Holt R.C.E. 27943

REVISION	BY	DATE

Town of Yucca Valley

INLET TYPE X
(GRATE DETAILS)

STANDARD DRAWING NO. 460

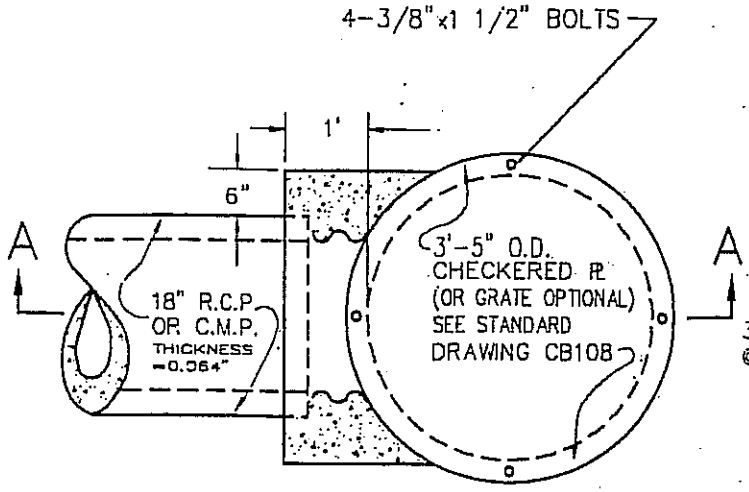

PLAN

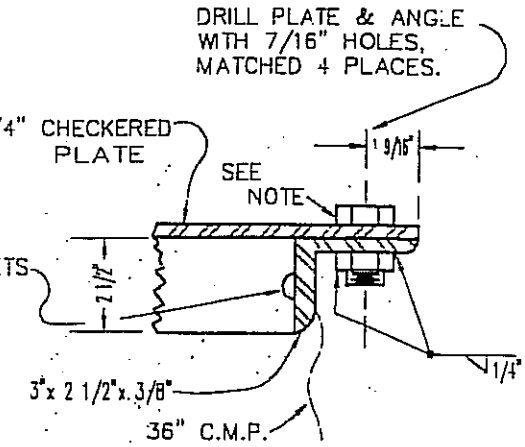

DETAIL "B"

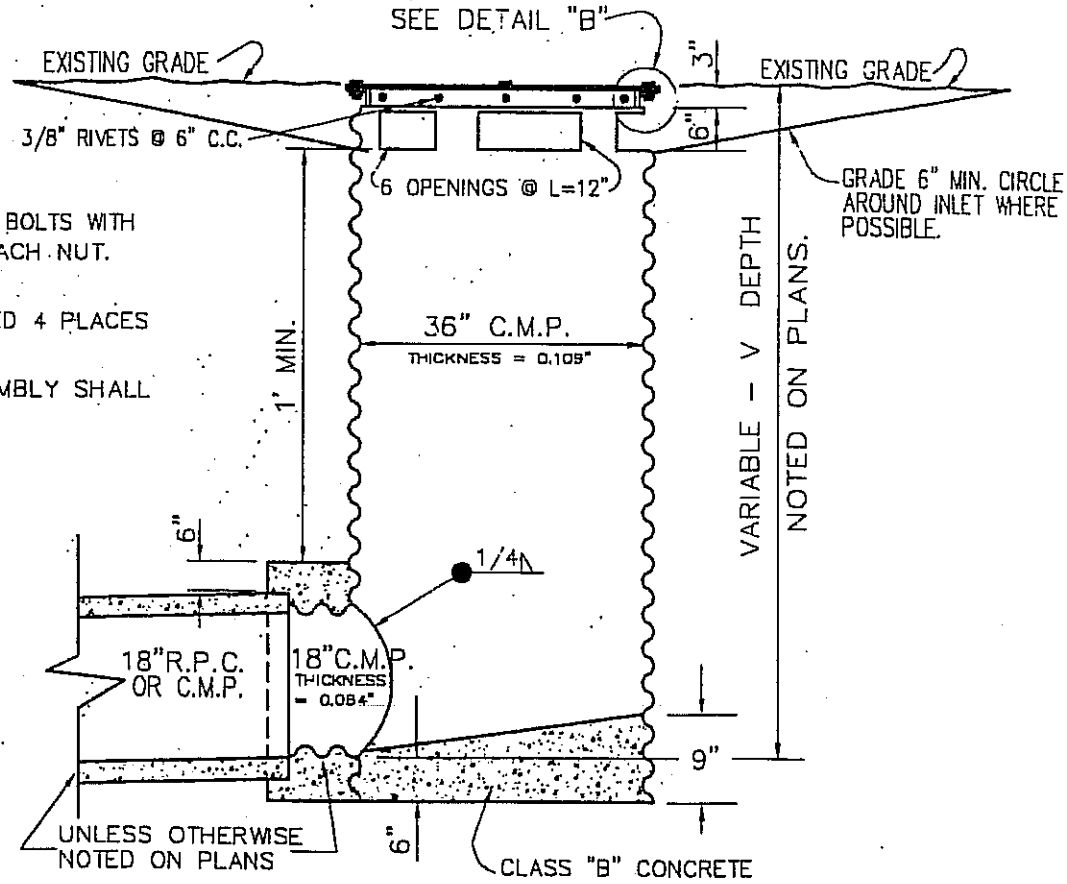

SECTION A-A

NOTES:

1. 3/8" x 1 1/2" GALVANIZED BOLTS WITH HEX NUTS. FIELD WELD EACH NUT TO ANGLE.
2. DRILL HOLE 7/16" MATCHED 4 PLACES AS SHOWN IN PLAN.
3. PLATE AND ANGLE ASSEMBLY SHALL BE GALVANIZED.

REGISTERED PROFESSIONAL ENGINEER
ROBERT K. HOLT
No.27943
EXPIRES 03-31-98
CIVIL
STATE OF CALIFORNIA

APPROVED: _____ DATE _____

APPROVED: TOWN ENGINEER Robert K. Holt R.C.E. 27943

REVISION	BY	DATE

Town of Yucca Valley

INLET TYPE IX
(CHECKERED PLATE)

STANDARD DRAWING NO. 461

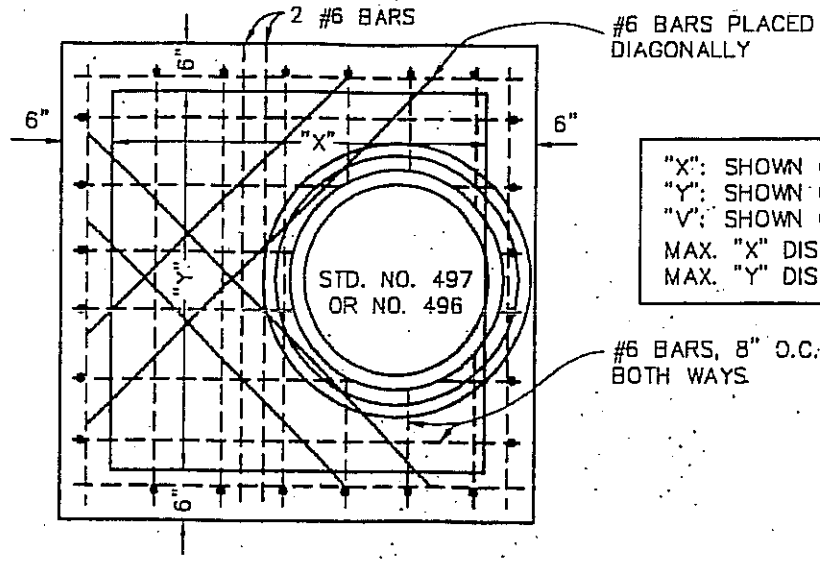

"X": SHOWN ON PLANS.
"Y": SHOWN ON PLANS.
"V": SHOWN ON PLANS.
MAX. "X" DISTANCE=4'
MAX. "Y" DISTANCE=7'

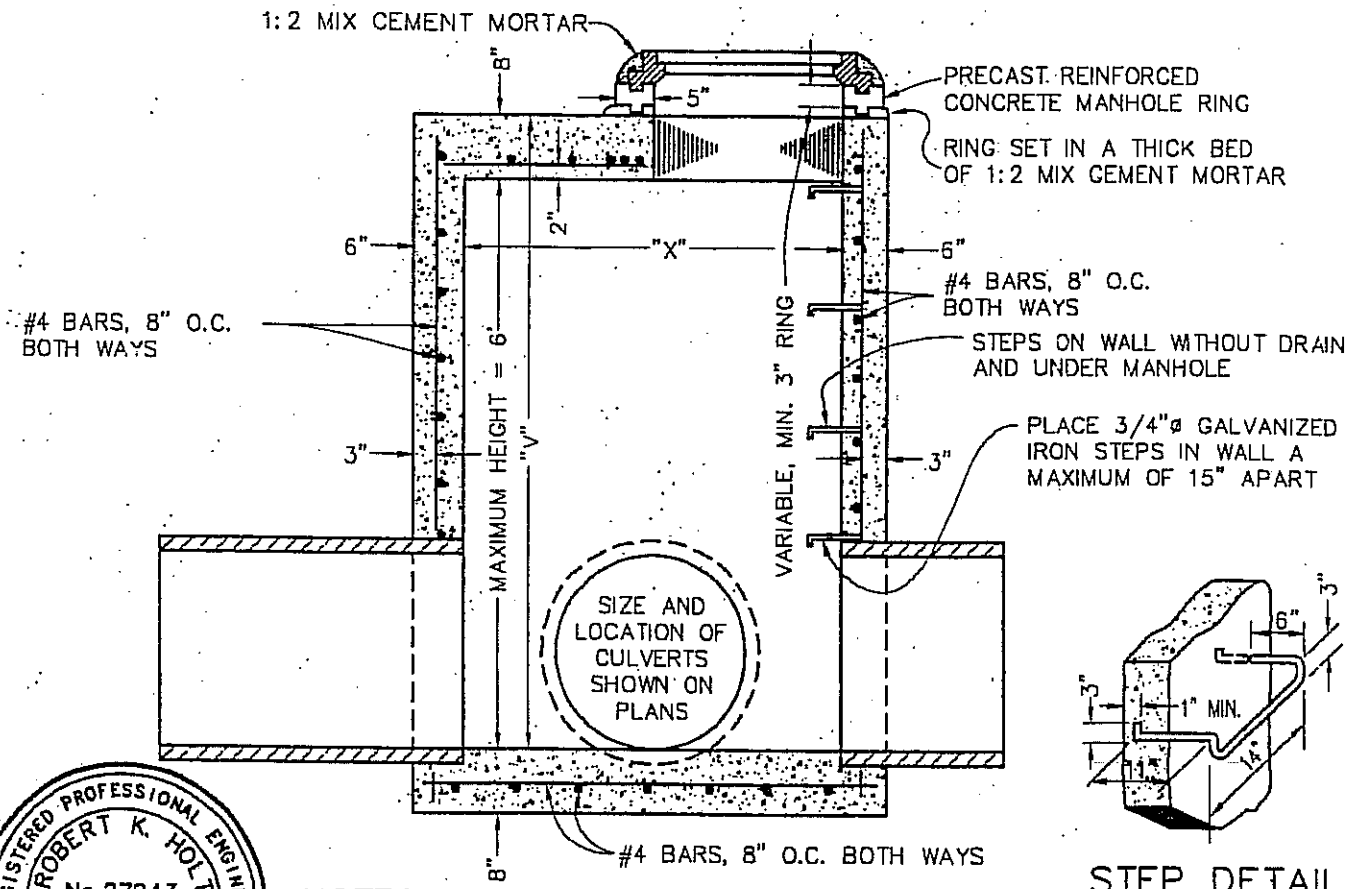

STEP DETAIL

REGISTERED PROFESSIONAL ENGINEER
ROBERT K. HOLT
No.27943
EXPIRES 03-31-98
CIVIL
STATE OF CALIFORNIA

NOTES:

1. STORM DRAIN CLEANOUT SHALL BE CONSTRUCTED OF CLASS "A" CONCRETE.
2. CLEARANCE FROM I.D. OF PIPE TO CLEANOUT WALL SHALL BE 4" MIN.
3. APPROVED PRECAST CONCRETE MANHOLE SHAFT RINGS WILL BE ACCEPTED IN LIEU OF CAST-IN-PLACE SHAFT.

APPROVED: _____ DATE _____

APPROVED: TOWN ENGINEER Robert K. Holt R.C.E. 27943

REVISION	BY	DATE

Town of Yucca Valley

STORM DRAIN CLEANOUT

STANDARD DRAWING NO. 462

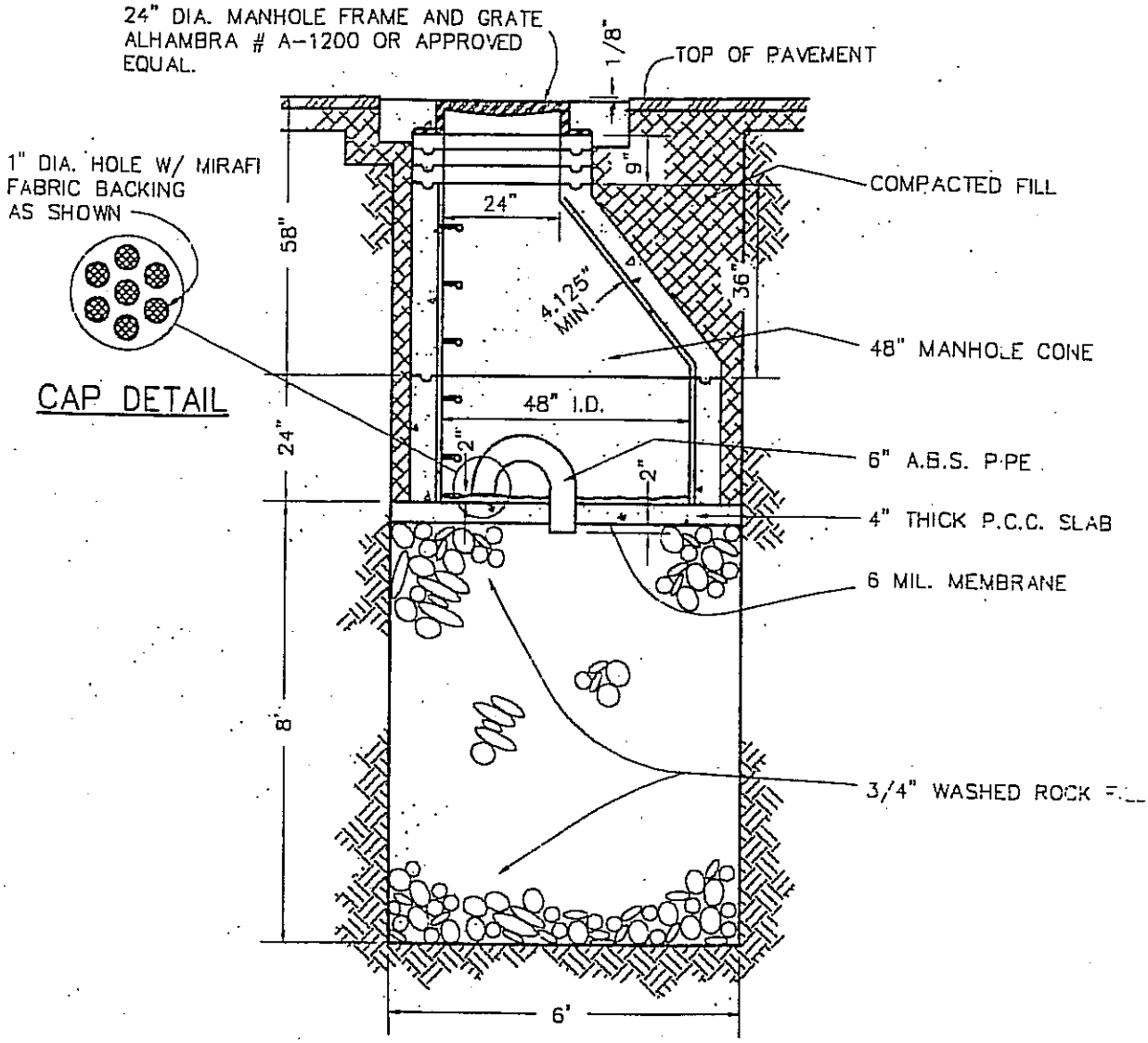

REGISTERED PROFESSIONAL ENGINEER
ROBERT K. HOLT
No.27943
EXPIRES
03-31-98
CIVIL
STATE OF CALIFORNIA

NOTES:

1. PRECAST REINFORCED CONCRETE MANHOLE PIPE TO MEET REQUIREMENTS OF ASTM C 478 SPECIFICATIONS WITH INCREASES IN REINFORCEMENT AND WALL THICKNESS TO MEET LOCAL REQUIREMENTS. MINIMUM COMPRESSIVE STRENGTH OF CONCRETE SHALL BE 4000 P.S.I. AT 28 DAYS.
2. DRYWELL DIMENSIONS AND LOCATION SHALL BE VERIFIED BY A LICENSED SOILS ENGINEER.
3. FINAL DESIGN IS SUBJECT TO APPROVAL BY THE TOWN ENGINEER.

APPROVED: _____ DATE _____

APPROVED: TOWN ENGINEER Robert K. Holt R.C.E. 27943

REVISION	BY	DATE

Town of Yucca Valley

STANDARD DRY WELL

STANDARD DRAWING NO. 463

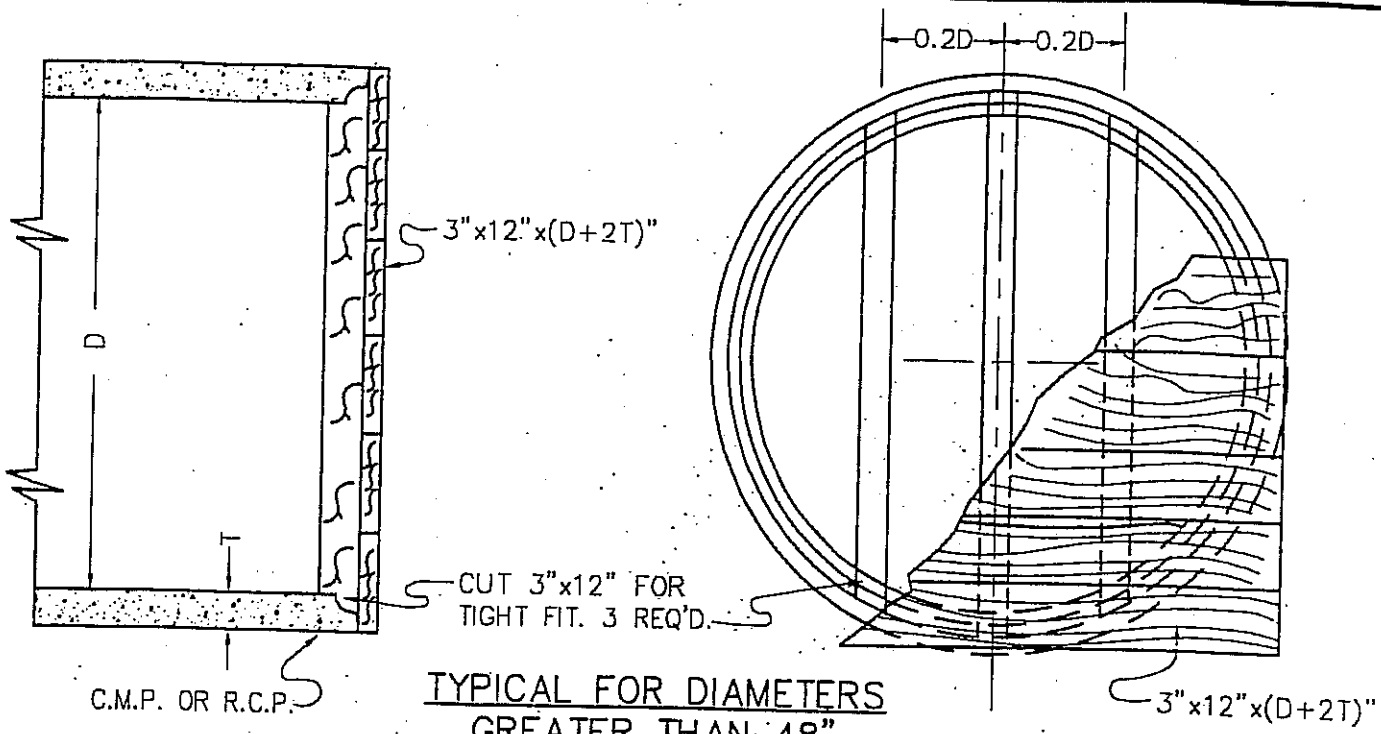

TYPICAL FOR DIAMETERS GREATER THAN 48"

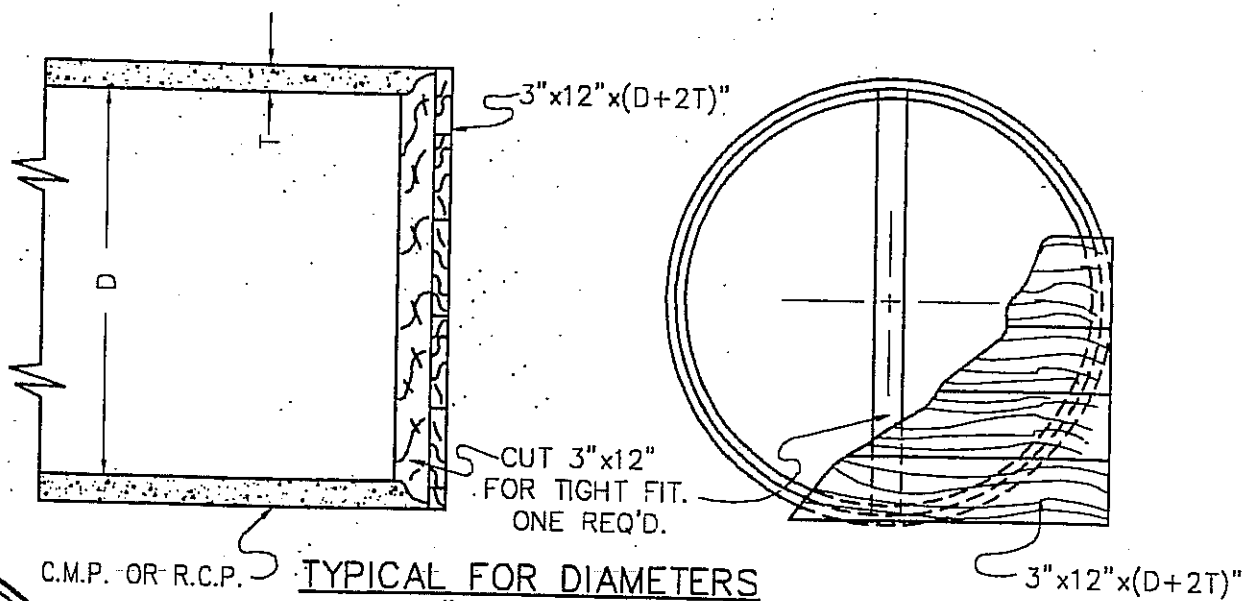

TYPICAL FOR DIAMETERS 48" AND LESS

REGISTERED PROFESSIONAL ENGINEER
ROBERT K. HOLT
No.27943
EXPIRES
03-31-98
CIVIL
STATE OF CALIFORNIA

NOTES:

1. NAIL 3"x12" TO VERTICAL SUPPORTS WITH 40d GALV. NAILS 3" O.C.
2. ALL LUMBER SHALL BE CREOSOTED DOUGLAS FIR, 1500 f CONSTRUCTION GRADE.

APPROVED: _____ DATE _____

APPROVED: TOWN ENGINEER Robert K. Holt R.C.E. 27943

REVISION	BY	DATE

Town of Yucca Valley

TIMBER BULKHEADS

STANDARD DRAWING NO. 464

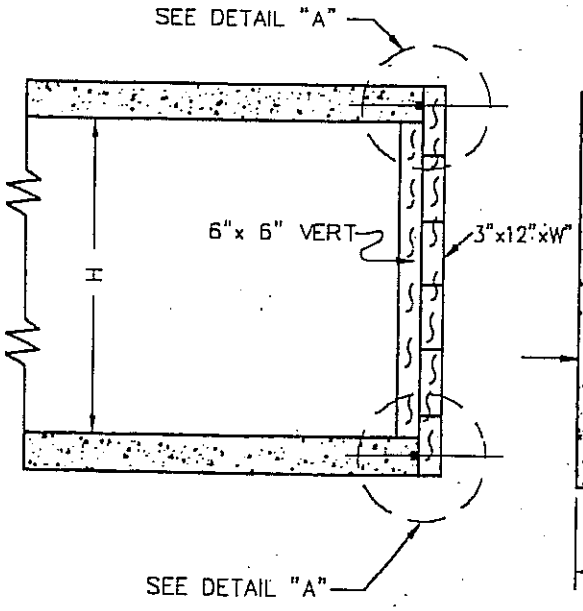

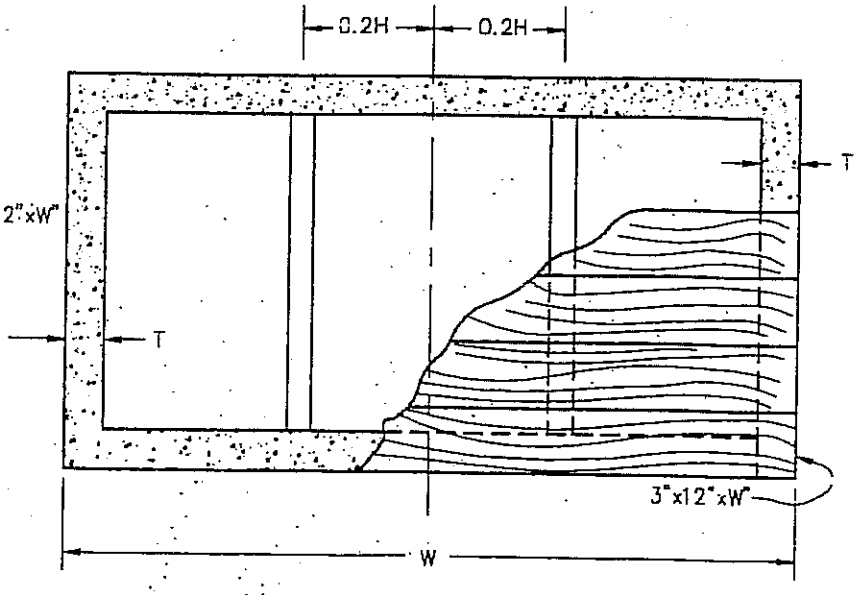

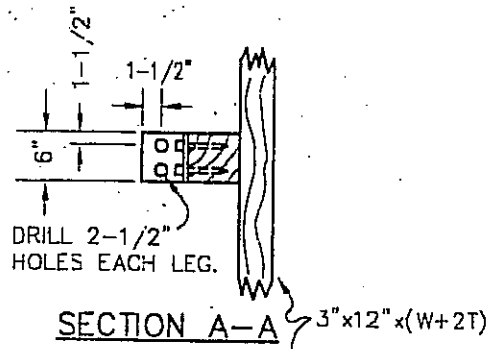

SECTION A–A

NOTES:

1. NAIL 3"x 12" TO VERTICAL SUPPORTS WITH 40d GALV. NAILS 3" C.C.
2. ALL LUMBER SHALL BE CREOSOTED DOUGLAS FIR, 1500 f CONSTRUCTION GRADE.

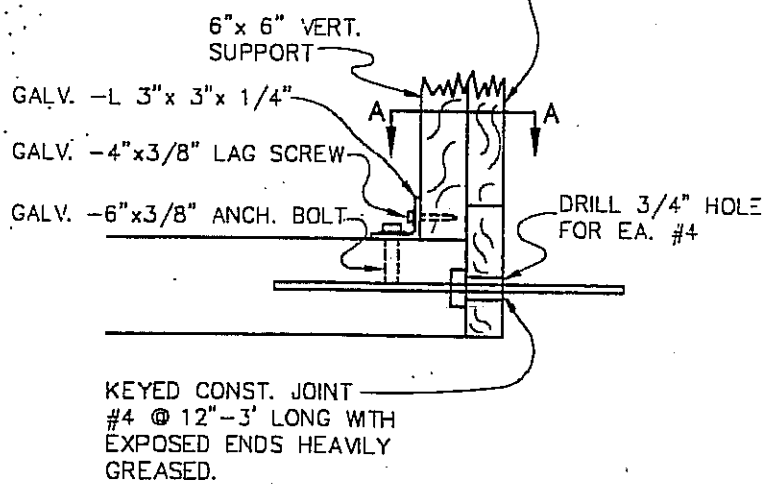

DETAIL A

REGISTERED PROFESSIONAL ENGINEER
ROBERT K. HOLT
No.27943
EXPIRES 03-31-98
CIVIL
STATE OF CALIFORNIA

APPROVED:

DATE

APPROVED: TOWN ENGINEER

Robert K. Holt R.C.E. 27943

REVISION	BY	DATE

Town of Yucca Valley

TIMBER BULKHEADS

STANDARD DRAWING NO. 465

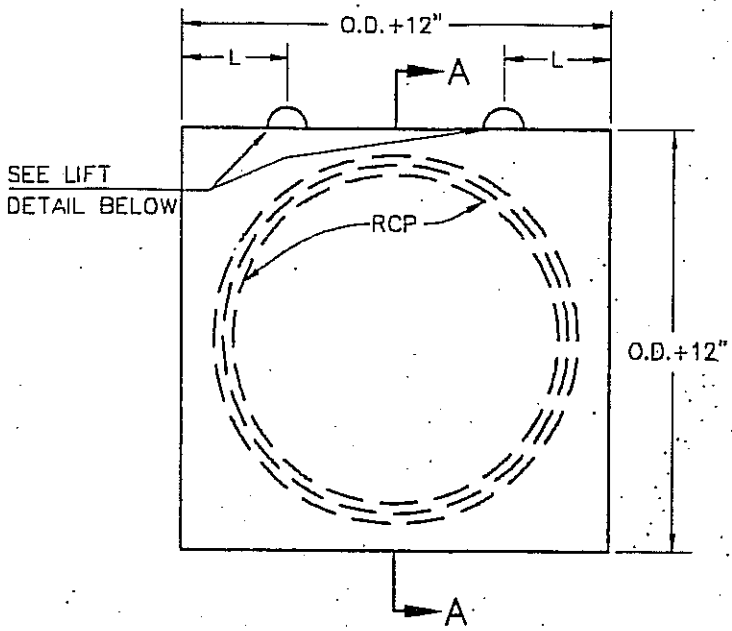

FRONT VIEW

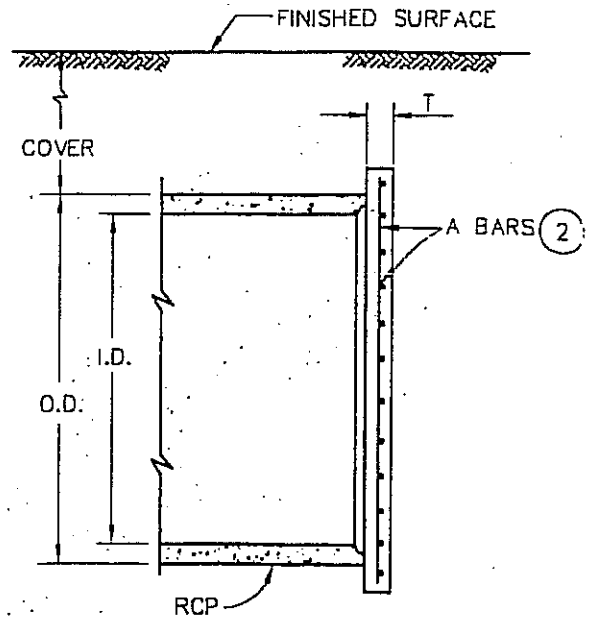

SECTION A-A

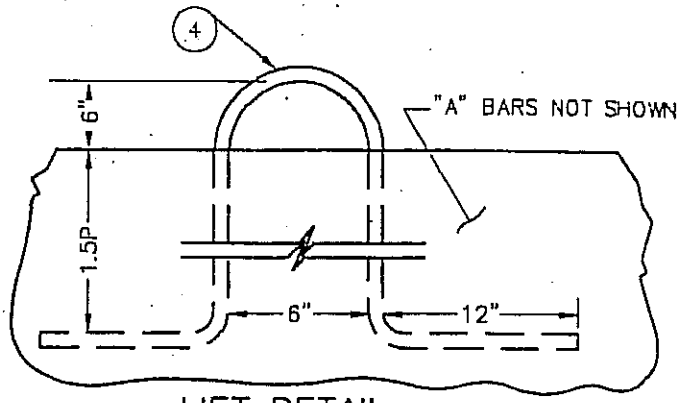

LIFT DETAIL

I.D. (IN.)	MAX COVER (FT.)	T (IN.)	A BARS	L.P.
48-51	5	4	4 @ 9	1'-6"
	10	4	4 @ 6	
	15	5	4 @ 6	
54-60	5	4	4 @ 6	1'-8"
	10	5	4 @ 6	
	15	5	5 @ 6	
63-66	5	5	4 @ 6	1'-10"
	10	5	5 @ 6	
	15	5	5 @ 6	
69-72	5	5	4 @ 6	2'-0"
	10	5	5 @ 6	
	15	5	6 @ 6	
75-78	5	5	5 @ 6	2'-2"
	10	5	6 @ 6	
	15	6	6 @ 6	
81-84	5	5	6 @ 6	2'-4"
	10	5	6 @ 6	
	15	6	6 @ 5	
87-90	5	5	6 @ 6	2'-5"
	10	6	6 @ 6	
	15	6	6 @ 5	
93-96	5	5	6 @ 6	2'-7"
	10	6	6 @ 5	
	15	6	7 @ 6	

NOTES:

1. CONCRETE SHALL BE CLASS "B".
2. REINFORCING STEEL SHALL BE CENTERED IN BULKHEAD WITH HORIZONTAL "A" BARS TOWARDS OUTSIDE FACE OF BULKHEAD.
3. WHERE CONCRETE BULKHEAD IS USED WITH RCB, T & "A" BARS SHALL BE DETERMINED BY THE HEIGHT OF THE R.C.B.
4. LIFTS SHALL BE WOVEN STEEL CABLE WITH SAME MIN. DIAMETER (d) AS "A" BARS. WEAVE CABLE THROUGH HORIZONTAL "A" BARS. COAT EXPOSED PORTION OF CABLE LIFTS WITH AN APPROVED BITUMINOUS PAINT PRIOR TO BACKFILLING TRENCH.

REGISTERED PROFESSIONAL ENGINEER
ROBERT K. HOLT
No.27943
EXPIRES
03-31-98
CIVIL
STATE OF CALIFORNIA

APPROVED: _____ DATE _____

APPROVED: TOWN ENGINEER Robert K. Holt R.C.E. 27943

REVISION	BY	DATE

Town of Yucca Valley

CONCRETE BULKHEAD

STANDARD DRAWING NO. 466

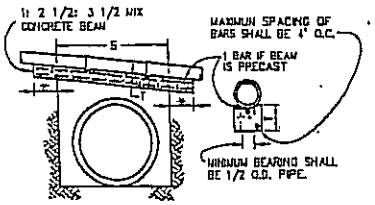

CASE 1
REINFORCED CONCRETE BEAM

* SEE TABLE BELOW FOR MINIMUM LENGTH OF BEARING.

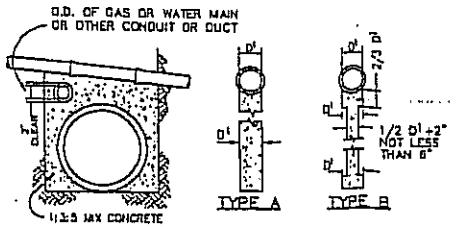

CASE 2
CONCRETE SUPPORT WALL

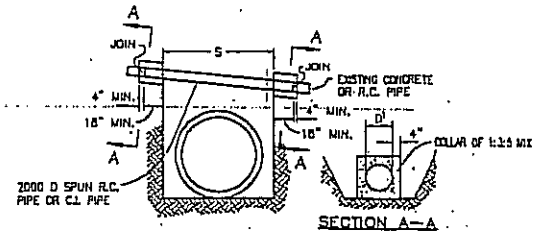

CASE 3
CAST IRON PIPE OR SPUN
REINFORCED CONCRETE PIPE

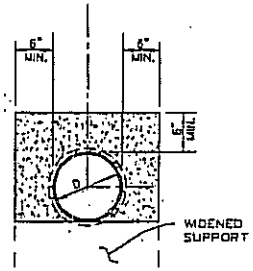

SECTION E-E

DIMENSIONS OF REINFORCED CONCRETE BEAM

S OR C	DEPTH OF COVER					
	0'-0"-8'-0"		8'-1"-16'-0"		16'-1"-25'-0"	
	T	BAR NO.	T	BAR NO.	T	BAR NO.
4	8"	4	8"	4	9 1/2"	5
5	8"	4	9"	5	11"	5
6	8 1/2"	5	10 1/2"	5	12 1/2"	6
7	9"	5	11 1/2"	6	13 1/2"	6
8	10"	5	12 1/2"	6	15"	7
9	11"	6	13 1/2"	6	16 1/2"	7
10	12"	6	15"	7	18"	7
11	13"	6	16"	7	19 1/2"	8
12	13 1/2"	6	17"	7	21"	8
13	14 1/2"	7	18 1/2"	7		
14	15 1/2"	7	20"	8		
15	16 1/2"	7	21"	8		
16	17 1/2"	7				
17	18 1/2"	8				
18	19 1/2"	8				

MINIMUM LENGTH OF BEARING OF ENDS OF R.C. BEAMS

DEPTH OF COVER	S	MIN. BEARING
0'-8'-0"	0'-18'-0"	18"
8'-1"-16'-0"	0'-12-0"	18"
	12'-1"-18'-0"	24"
16'-1"-25'-0"	0'-7'-0"	18"
	7'-1"-10'-0"	24"
	10'-1"-12'-0"	30"

GENERAL NOTES:

1. IN THE CASE OF SANITARY SEWER SUPPORTS PER CASE 1, 2 OR 3 OF THIS STANDARD, THE SEWER SHALL BE ENCASED PER THE SECTION E-E, AND THE SUPPORT SHALL BE LENGTHENED AND WIDENED TO FULLY SUPPORT SUCH ENCASEMENT.
2. ANY OF THE CASES SHOWN ON THIS STANDARD MAY BE USED AT THE CONTRACTOR'S OPTION UNLESS OTHERWISE SHOWN ON THE PROJECT DRAWING.
3. THE MINIMUM LENGTHS OF BEARING SHOWN AT THE ENDS OF R.C. BEAMS, CAST IRON AND STEEL PIPES SHALL BE INCREASED IF SO DIRECTED BY THE ENGINEER.
4. "S" IN ALL CASES EQUALS THE SPAN OF THE PIPE SUPPORT MEASURED ALONG ITS CENTERLINE BETWEEN THE SIDES OF THE TRENCH OR TO CENTERLINE OF COLUMN SUPPORTS.

ALLOWABLE SPANS FOR CAST IRON PIPE

DEPTH OF COVER	CLASS 150 PIPE			CLASS 250 PIPE		
	INSIDE DIAMETER			INSIDE DIAMETER		
	6"	8"	10"	6"	8"	10"
0'-8'-0"	8'-6"	11'-0"	13'-0"	8'-6"	11'-0"	13'-0"
8'-1"-16'	6'-6"	8'-0"	10'-0"	8'-6"	8'-6"	10'-0"
16'-1"-25'	5'-0"	6'-0"	8'-0"	5'-0"	6'-0"	8'-6"

CASE 1 NOTES:

1. WIDTH OF BEAM SHALL BE OUTSIDE DIAMETER OF PIPE PLUS 2".
2. REINFORCING STEEL SHALL BE PLACED 1 1/2" CLEAR FROM THE SIDES AND BOTTOMS OF BEAMS.
3. IF BEAMS ARE PRECAST, ENDS OF BEAMS SHALL BE BEDDED IN 1:3:5 MIX CONCRETE TO EDGE OF TRENCH.
4. 1:2 MIX MORTAR SHALL BE PLACED BETWEEN TOP OF BEAMS AND BOTTOM OF PIPE TO GIVE BEARING.

CASE 2 NOTES:

1. SUPPORTING WALL SHALL HAVE A FIRM BEARING ON THE SUBGRADE AND AGAINST THE SIDES OF THE EXCAVATION.
2. WALL SHALL BE AT LEAST 2" FREE AND CLEAR OF GAS OR WATER MAIN OR OTHER CONDUIT OR DUCT.
3. EITHER TYPE A OR TYPE B CROSS SECTION MAY BE USED AT CONTRACTOR'S OPTION.
4. WHENEVER SO DIRECTED BY THE ENGINEER, THE CONTRACTOR SHALL PIERCE THE WALL WITH SUITABLE OPENINGS TO PREVENT PRESSURE RESULTING FROM FLOODING THE BACKFILL. THE VOLUME OF THE PIERCED OPENING SHALL NOT EXCEED 1/2 THE VOLUME OF THE SUPPORTING WALL.

CASE 3 NOTES:

1. CLASS 2000-D SPUN REINFORCED CONCRETE PIPE OF THE SAME DIAMETER AS EXISTING PIPE MAY BE USED ONLY WHERE WIDTH OF TRENCH IS 5'-0" OR LESS.

REGISTERED PROFESSIONAL ENGINEER ROBERT K. HOLT No.27943 EXPIRES 03-31-98 CIVIL STATE OF CALIFORNIA

APPROVED: _____ DATE _____

APPROVED: TOWN ENGINEER Robert K. Holt R.C.E. 27943

REVISION	BY	DATE

Town of Yucca Valley

PIPE SUPPORTS ACROSS TRENCHES

STANDARD DRAWING NO. 467

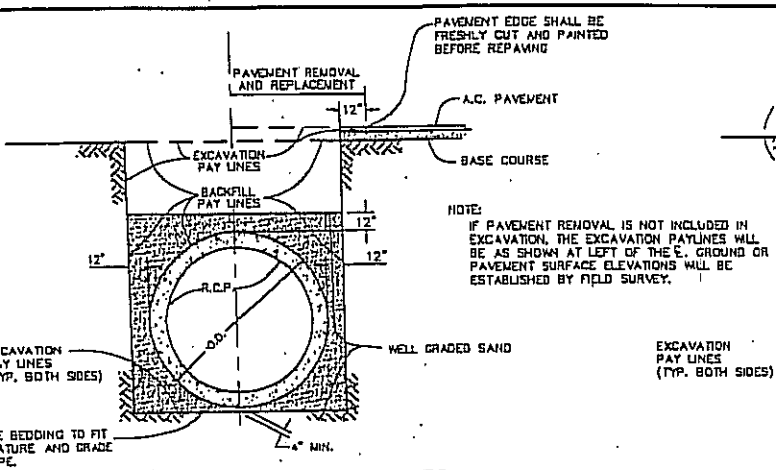

NOTE:
IF PAVEMENT REMOVAL IS NOT INCLUDED IN EXCAVATION, THE EXCAVATION PAYLINES WILL BE AS SHOWN AT LEFT OF THE E. GROUND OR PAVEMENT SURFACE ELEVATIONS WILL BE ESTABLISHED BY FIELD SURVEY.

* R.C.P. BEDDING & PAY LINES
NORMAL CONDITION

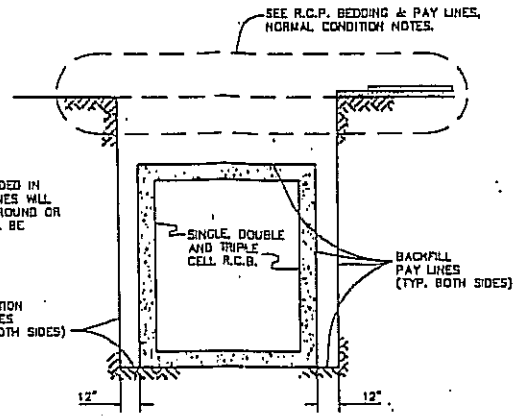

* R.C.B. PAY LINES
NORMAL CONDITION

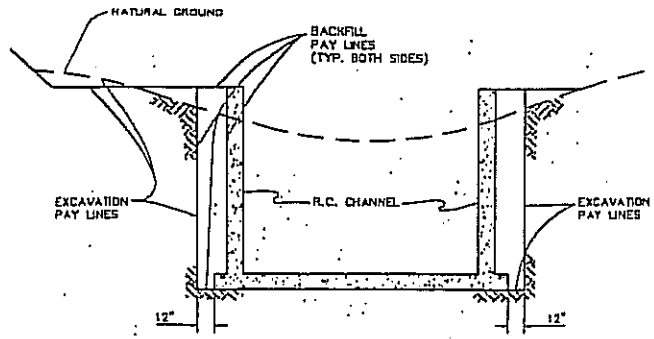

* R.C. CHANNEL PAY LINES
NORMAL CONDITION

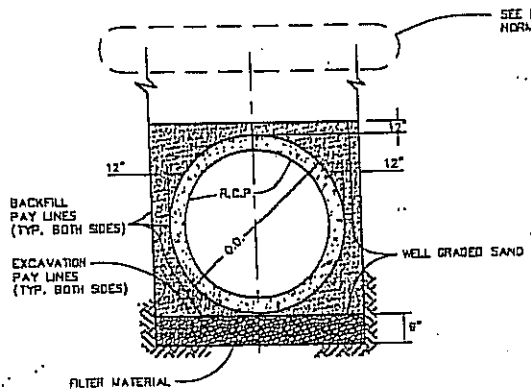

R.C.P. BEDDING & PAY LINES
GROUNDWATER CONDITION

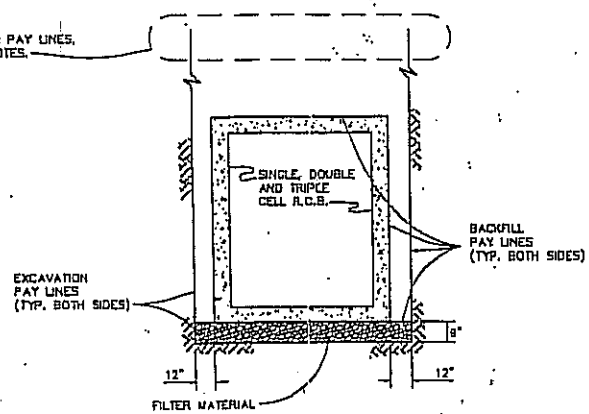

R.C.B. PAY LINES
GROUNDWATER CONDITION

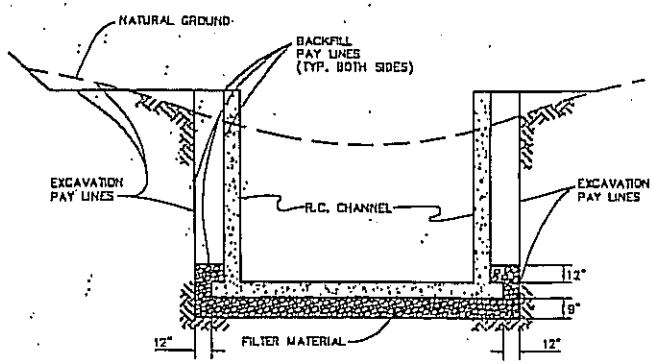

R.C. CHANNEL PAY LINES
GROUNDWATER CONDITION

* NOTE:
THE NORMAL CONDITION, BEDDING & PAY LINES ARE TO BE USED UNLESS OTHERWISE INDICATED IN THE SPECIFICATIONS OR DIRECTED BY THE ENGINEER.

REGISTERED PROFESSIONAL ENGINEER
ROBERT K. HOLT
No. 27943
EXPIRES 03-31-98
CIVIL
STATE OF CALIFORNIA

APPROVED: _____ DATE _____

APPROVED: TOWN ENGINEER Robert K. Holt R.C.E. 27943

REVISION	BY	DATE

Town of Yucca Valley

BEDDING
AND
PAY LINES

STANDARD DRAWING NO. 468

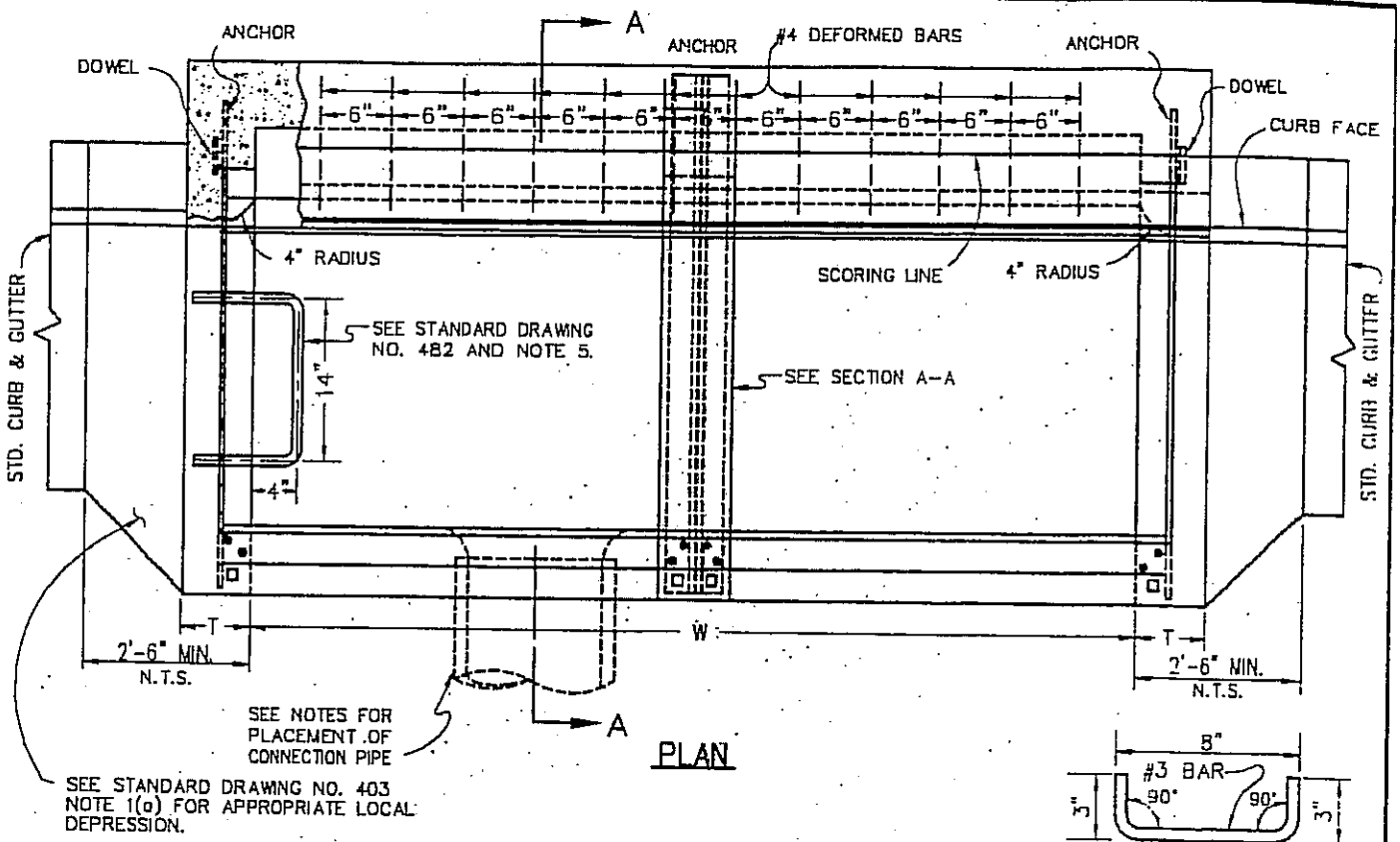

PLAN

DETAIL OF DOWEL

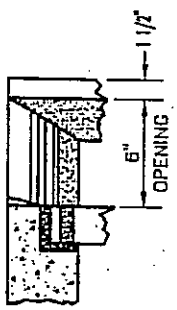

DETAIL OF END WALL

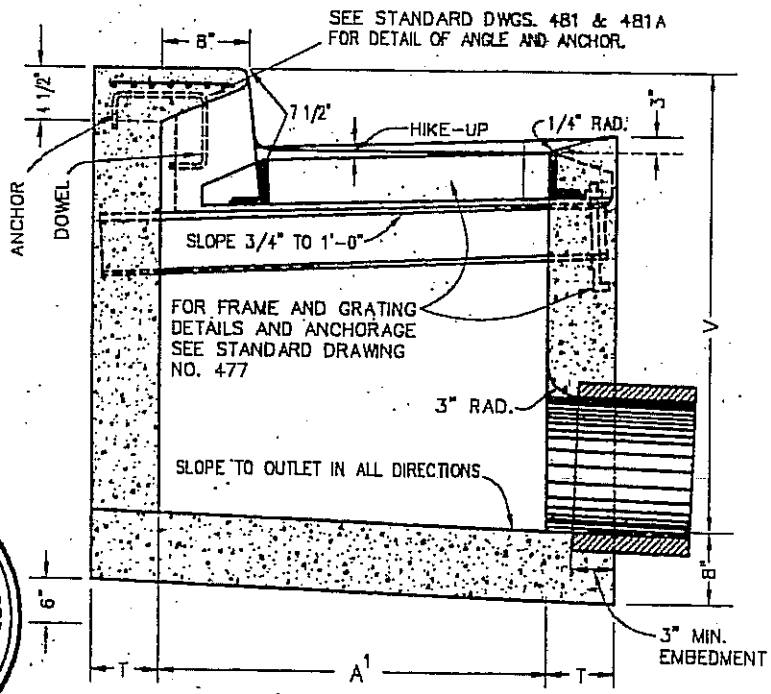

SECTION-AA

STEEL LIST					
NO. OF GRATINGS	#4 DEF. BARS 11" LONG	5/16" x 10" FACE PLATE	DOWELS	ANCHORS	3/4" GALV. STEEL STEPS
1	5	3'-11 1/2"	2	2	SEE NOTES
2	12	7'-4 3/4"	2	3	
3	19	10'-10 1/2"	2	4	

A1	GRATE TYPE
34"	R.C.F.C. STD. CB104
32"	CALTRANS STD. D77-B

REGISTERED PROFESSIONAL ENGINEER
ROBERT K. HOLT
No.27943
EXPIRES 03-31-98
CIVIL
STATE OF CALIFORNIA

APPROVED: _____ DATE _____

APPROVED: TOWN ENGINEER Robert K. Holt R.C.E. 27943

REVISION	BY	DATE

Town of Yucca Valley

CATCH BASIN
NO. 4
SHT. 1 OF 2

STANDARD DRAWING NO. 471

SEE STANDARD DWG. 483
MANHOLE FRAME AND COVER FOR CATCH BASINS.

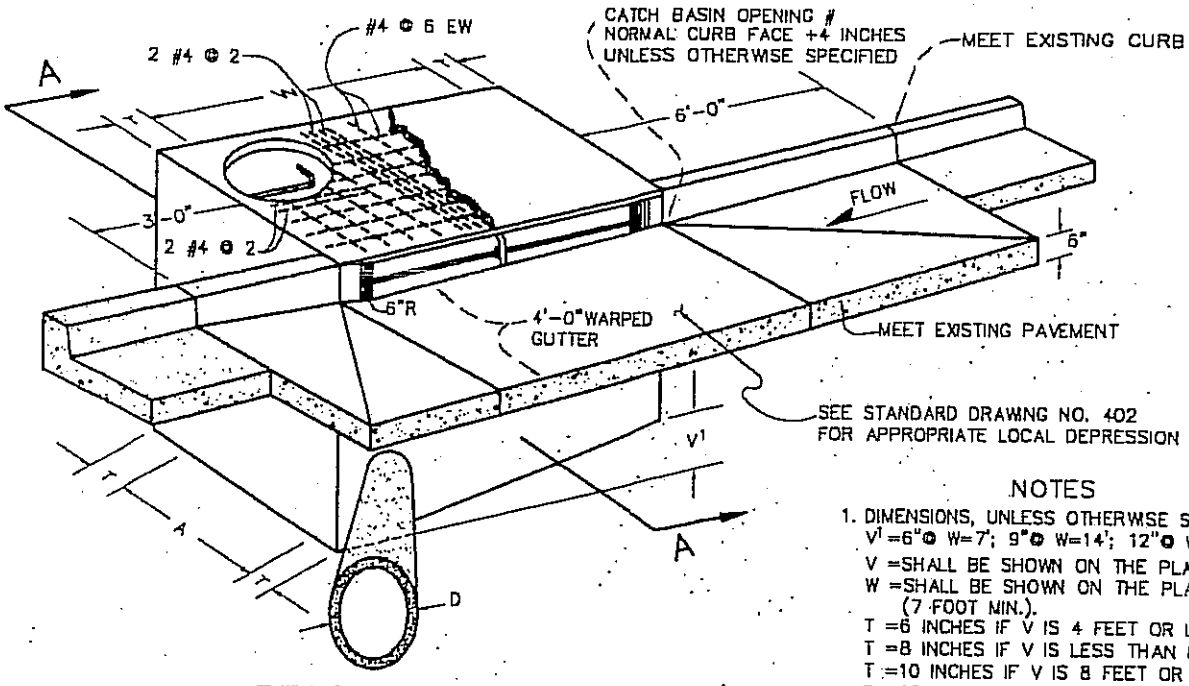

PERSPECTIVE OF CATCH BASIN NO. 1

SEE STD. DWGS. 481 & 481A CATCH BASIN INLET FOR DETAILS.

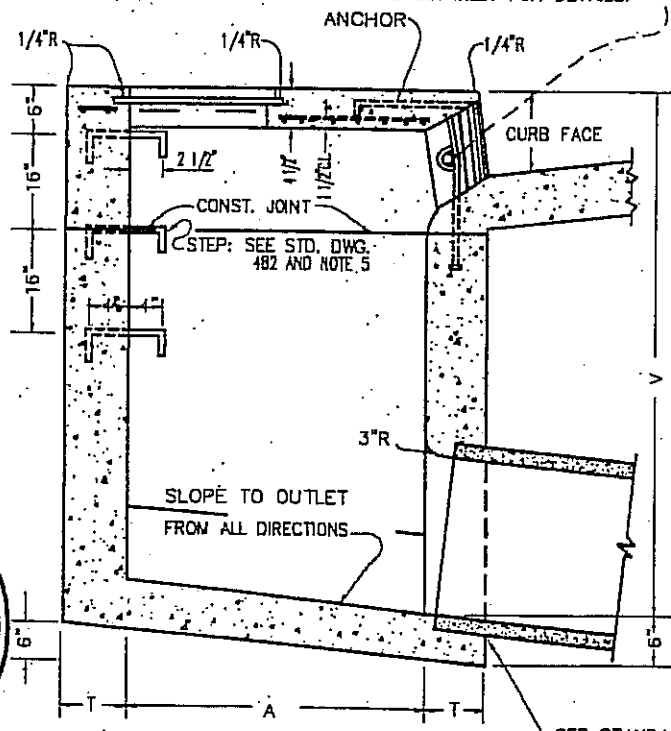

SECTION A–A

SEE STANDARD DRAWING No. 474, SPECIAL CONNECTIONS.

NOTES

1. DIMENSIONS, UNLESS OTHERWISE SPECIFIED:
   V^1 =6"@ W=7'; 9"@ W=14'; 12"@ W=21'
   V =SHALL BE SHOWN ON THE PLANS
   W =SHALL BE SHOWN ON THE PLANS (7 FOOT MIN.).
   T =6 INCHES IF V IS 4 FEET OR LESS.
   T =8 INCHES IF V IS LESS THAN 8 FEET.
   T =10 INCHES IF V IS 8 FEET OR MORE.
   D =18 INCHES UNLESS OTHERWISE SPECIFIED.
   A =38 INCHES UNLESS OTHERWISE SPECIFIED.
2. STRUCTURAL CONCRETE SHALL BE CLASS "A" P.C.C. (6 SACK).
3. THE REINFORCING STEEL SHALL BE NUMBER 4 DEFORMED BARS. CLEARANCE SHALL BE 1 1/2 INCH FROM THE BOTTOM OF THE SLAB. SEE NOTE 7.
4. THE SURFACE OF ALL EXPOSED CONCRETE SHALL CONFORM TO SLOPE, GRADE, COLOR, FINISH AND SCORING IN THE EXISTING OR PROPOSED CURB AND WALK ADJACENT TO THE BASIN. THE BASIN FLOOR SHALL BE GIVEN A TIGHT WOOD FLOAT FINISH. CURVATURE OF THE LIP AND SIDEWALKS AT THE GUTTER OPENING SHALL NOT BE MADE BY PLASTERING. THE OUTLET PIPE SHALL BE TRIMMED TO FINAL SHAPE AND LENGTH BEFORE THE CONCRETE IS POURED.
5. STEPS:
   3/4 INCH PLAIN ROUND GALVANIZED STEEL STEPS SHALL BE INSTALLED 16 INCHES APART WHEN V EXCEEDS 4 FEET 6 INCHES. THE TOP STEP SHALL BE 6 INCHES BELOW THE TOP SURFACE AND SHALL BE 2 1/2 INCHES CLEAR FROM THE WALL. ALL OTHER STEP SHALL BE 4 INCHES CLEAR FROM THE WALL. ONLY ONE STEP 12 INCHES FROM THE BOTTOM SHALL BE INSTALLED IF V IS 4 FEET 5 INCHES OR LESS. ALL STEPS SHALL BE ANCHORED NOT LESS THAN 4 INCHES INTO THE WALL OF THE BASIN.
6. CURB, GUTTER AND LOCAL DEPRESSIONS SHALL BE CLASS "B" CONCRETE.
7. SEE STANDARD DRAWING 473 FOR WALL & FLOOR STEEL REINFORCING.

REGISTERED PROFESSIONAL ENGINEER
ROBERT K. HOLT
No.27943
EXPIRES 03-31-98
CIVIL
STATE OF CALIFORNIA

APPROVED:

DATE

APPROVED: TOWN ENGINEER
Robert K. Holt
R.C.E. 27943

REVISION	BY	DATE

Town of Yucca Valley

CATCH BASIN NO. 1

STANDARD DRAWING NO. 470

NOTES FOR CATCH BASIN NO. 4

1. DIMENSIONS: UNLESS OTHERWISE SPECIFIED.

   V = 3.5 FEET.
   T = 6 INCHES, IF V IS 4 FEET OR LESS.
   T = 8 INCHES, IF V IS BETWEEN 4 FEET AND 8 FEET.
   T = 10 INCHES, IF V IS 8 FEET OR OVER.
   W = 2 FEET, 11-3/8 INCHES FOR ONE GRATING. ADD 3 FEET, 5-3/8 INCHES FOR EACH ADDITIONAL GRATING.
   S = 1-1/2 INCHES.
   R = 3/4 INCH.

   HIKE-UP SHALL BE PARALLEL TO PLANE OF GUTTER - SLOPE 3/4 INCH TO 1 FOOT.
   SLOPE OF FLOOR PARALLEL WITH CURB SHALL BE 1 IN 12.

2. CONCRETE SHALL BE CLASS "A" PORTLAND CEMENT CONCRETE (6.0 SACK)

3. THE REINFORCING STEEL SHALL BE NUMBER 4 DEFORMED BARS. CLEARANCE SHALL BE 1-1/2 INCHES FROM TOP SLAB. SEE STD. DWG. 473 AND NOTE 3.

4. THE SURFACE OF ALL EXPOSED CONCRETE SHALL CONFORM TO SLOPE, GRADE, COLOR, FINISH, AND SCORING IN THE EXISTING OR PROPOSED CURB AND WALK ADJACENT TO THE BASIN. THE BASIN FLOOR SHALL BE GIVEN A TIGHT WOOD FLOAT FINISH. CURVATURE OF THE LIP AND SIDEWALLS AT THE GUTTER OPENING SHALL NOT BE MADE BY PLASTERING. THE OUTLET PIPE SHALL BE TRIMMED TO FINAL SHAPE AND LENGTH BEFORE THE CONCRETE IS POURED.

5. STEPS: 3/4 INCH PLAIN ROUND GALVANIZED STEEL STEPS ARE REQUIRED AS FOLLOWS:

   IF V IS 4.5 FEET OR LESS, NO STEPS ARE REQUIRED.
   IF V IS MORE THAN 4.5 FEET, AND NOT MORE THAN 5.0 FEET, INSTALL ONE STEP 12 INCHES ABOVE FLOOR OF BASIN.
   IF V IS MORE THAN 5.0 FEET, INSTALL STEPS 16 INCHES APART WITH THE TOP STEP 6 INCHES BELOW THE TOP OF GRATING.
   ALL STEPS SHALL BE 4 INCHES CLEAR FROM THE WALL AND ANCHORED NOT LESS THAN 4 INCHES INTO THE WALL OF THE BASIN.

REGISTERED PROFESSIONAL ENGINEER
ROBERT K. HOLT
No.27943
EXPIRES
03-31-98
CIVIL
STATE OF CALIFORNIA

APPROVED: _____ DATE _____

APPROVED: TOWN ENGINEER Robert K. Holt R.C.E. 27943

REVISION	BY	DATE

Town of Yucca Valley

CATCH BASIN
NO. 4
SHT. 2 OF 2

STANDARD DRAWING NO. 471A

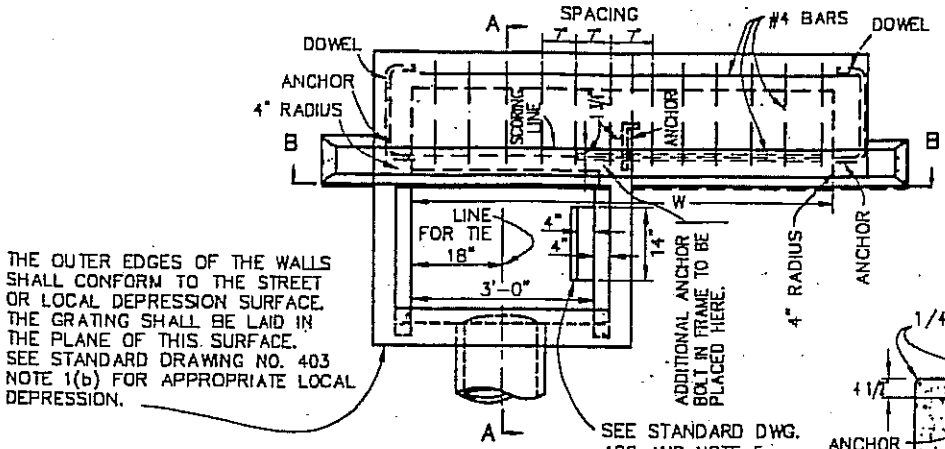

PLAN

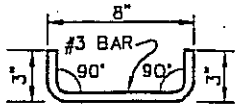

DETAIL OF DOWEL

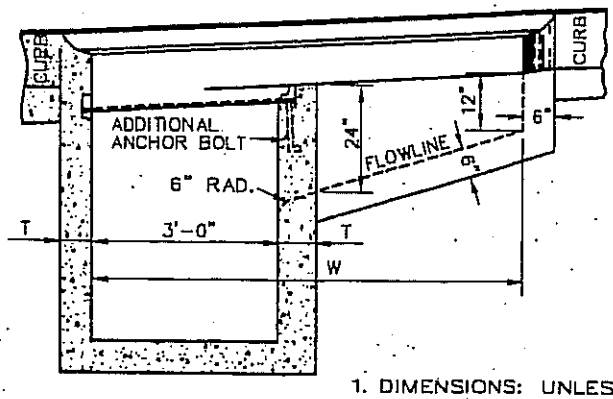

SECTION B-B

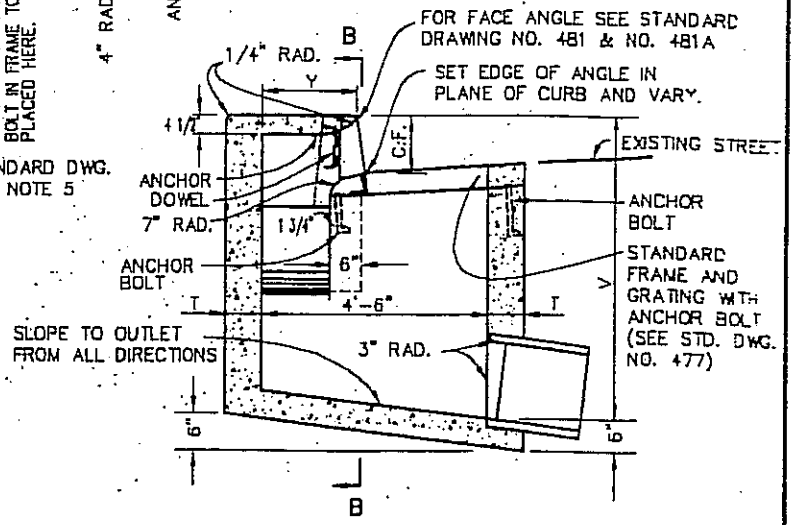

SECTION A-A

NOTES:

1. DIMENSIONS: UNLESS OTHERWISE SPECIFIED, V = 4.5 FEET. W = 7.0 FEET.
   T = 6 INCHES IF V IS 5 FEET OR LESS. T = 8 INCHES IF V IS BETWEEN 5 FT. & 8 FEET.
   T = 10 INCHES IF V IS 8 FEET OR MORE. Y = 2 FEET 3 INCHES.
2. CONCRETE SHALL BE CLASS "A" PORTLAND CEMENT CONCRETE (6.0 SACK).
3. THE REINFORCING STEEL SHALL BE NUMBER 4 DEFORMED BARS. CLEARANCE SHALL BE 1 1/2" FROM THE BOTTOM OF THE SLAB. SEE STANDARD DRAWING 473 - NOTE 3.
4. THE SURFACE OF ALL EXPOSED CONCRETE SHALL CONFORM TO THE SLOPE, GRADE, COLOR, FINISH, AND SCORING IN THE EXISTING OR PROPOSED CURB AND WALK ADJACENT TO THE BASIN. THE BASIN FLOOR SHALL BE GIVEN A TIGHT WOOD FLOAT FINISH. CURVATURE OF THE LIP AND SIDE WALLS AT THE GUTTER OPENING SHALL NOT BE MADE BY PLASTERING. THE OUTLET PIPE SHALL BE TRIMMED TO FINAL SHAPE AND LENGTH BEFORE THE CONCRETE IS POURED.
5. STEPS: 3/4 INCH PLAIN ROUND GALVANIZED STEEL STEPS SHALL BE INSTALLED 16 INCHES APART WHEN V EXCEEDS 4 FEET 6 INCHES. THE TOP STEP SHALL BE 6 INCHES BELOW THE TOP SURFACE AND SHALL BE 2 1/2 INCHES CLEAR FROM THE WALL. ALL OTHER STEPS SHALL BE 4 INCHES CLEAR FROM THE WALL. ONLY ONE STEP 12 INCHES FROM THE BOTTOM SHALL BE INSTALLED IF V IS 4 FEET 6 INCHES OR LESS. ALL STEPS SHALL BE ANCHORED NOT LESS THAN 4 INCHES INTO THE WALL OF THE BASIN.

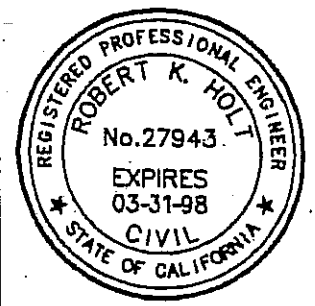

APPROVED: _____ DATE _____

APPROVED: TOWN ENGINEER Robert K. Holt R.C.E. 27943

REVISION	BY	DATE

Town of Yucca Valley

CATCH BASIN NO. 6

STANDARD DRAWING NO. 472

NOTES

1. WALL & FLOORING REINFORCING SHOWN HEREON SHALL BE USED WITH CATCH BASIN STANDARD DRAWINGS.
2. REINFORCING STEEL SHOWN HEREON SHALL BE USED IN ALL CATCH BASINS ON STATE HIGHWAYS REGARDLESS OF BASIN LENGTH OR DEPTH.
3. PROVIDE WALL & FLOOR STEEL REINFORCING WHEN THE FOLLOWING "V" DEPTHS ARE EQUALED OR EXCEEDED:

BASIN LENGTH=W	BASIN DEPTH=V
TO 7.0'	10'
7' TO 14.0'	7'
14' TO 21.0'	6'
OVER 21.0'	ALL DEPTHS

REINFORCING STEEL SHOWN HEREON SHALL BE USED IN ALL CATCH BASINS WHEN EXCAVATION OR SOIL CONDITIONS REQUIRE BOTH SIDES OF THE WALLS TO BE FORMED REGARDLESS OF BASIN LENGTH OR DEPTH.

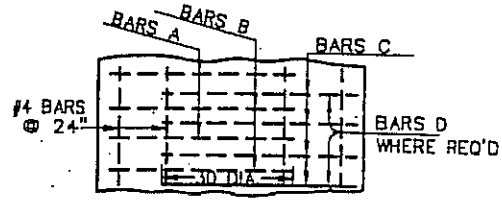

FLOOR REINFORCEMENT SECTION 2

W OF C.B.	V (FT.) FROM	V (FT.) TO (INCL.)	T (IN)	FRONT WALL STEEL HOR.	FRONT WALL STEEL VERT.	REAR & END WALLS & FLOOR STEEL EACH WAY
TO 7'		4	6	#3@ 6"	#3@ 6"	# 3 @ 6"
TO 7'	4	8	8	#4@ 12"	#4@ 12"	# 4 @ 12"
TO 7'	8	12	10	#4@ 10"	#4@ 10"	# 4 @ 10"
14'		4	6	#3@ 6"	#3@ 6"	# 3 @ 6"
14'	4	8	8	#4@ 12"	#4@ 12"	# 4 @ 12"
14'	8	10	10	#4@ 8"	#4@ 12"	# 4 @ 10"
14'	10	12	10	#4@ 6"	#4@ 12"	# 4 @ 10"

WALL AND FLOOR STEEL

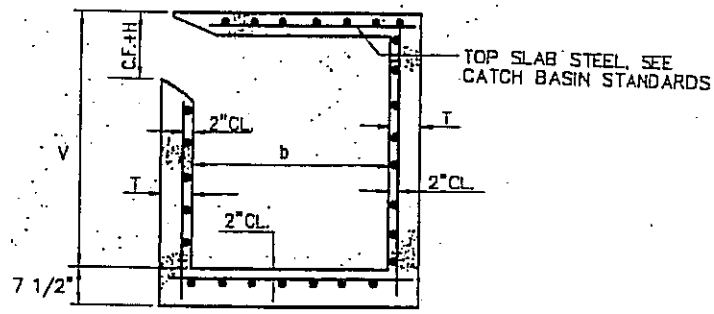

SECTION 1

CATCH BASIN REINFORCEMENT-"W" TO 14'(INCL.)

V (FT.) FROM	V (FT.) TO (INCL.)	T (IN)	FRONT WALL STEEL BAR A & B	REAR WALL STEEL BARS C	REAR WALL STEEL BARS D	REAR WALL STEEL BARS E	END WALL STEEL HOR. & VERT.
	4	6	# 3 @ 24"	#3@ 12"	-----	#4@ 24"	#3@ 18"
4	5	8	# 3 @ 20"	#3@ 12"	-----	#4@ 24"	#3@ 14"
5	6	8	# 3 @ 12"	#3@ 10 1/2"	-----	#4@ 24"	#3@ 14"
6	7	8	# 4 @ 17"	#3@ 8 1/2"	-----	#4@ 24"	#3@ 14"
7	8	8	# 4 @ 13"	#3@ 6 1/2"	-----	#4@ 24"	#3@ 14"
8	9	10	# 4 @ 15"	#3@ 7 1/2"	-----	#4@ 20"	#3@ 11"
9	10	10	# 4 @ 12"	#4@ 12"	-----	#4@ 20"	#3@ 11"
10	11	10	# 5 @ 15"	-----	#4@ 11"	#4@ 18"	#3@ 11"
11	12	10	# 6 @ 18"	-----	#4@ 9"	#4@ 13"	#3@ 11"
	X=(V+T)-(C.F.+H+4 1/2")				Y= $(\frac{b+2X}{2})$+15 DIA-2"		

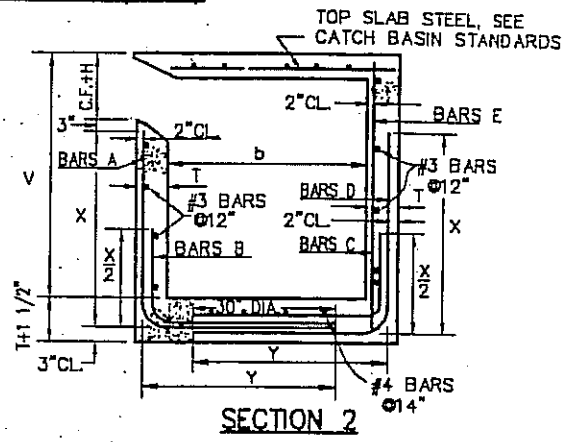

SECTION 2

WALL AND FLOOR STEEL

CATCH BASIN REINFORCEMENT-"W" GREATER THAN 14'

V (FT.) FROM	V (FT.) TO (INCL.)	T (IN)	SIDE & END WALL STEEL BARS G
	4	6	# 3 @ 6"
4	8	8	# 4 @ 6"
8	12	10	# 5 @ 6"

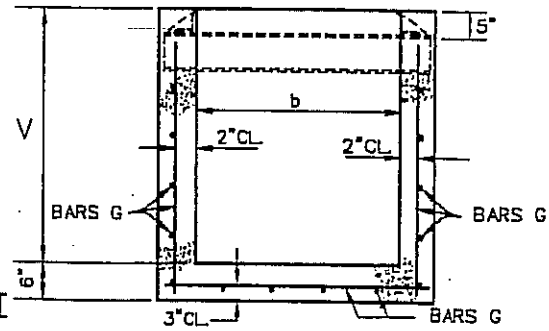

GRATING BASIN REINFORCEMENT

REGISTERED PROFESSIONAL ENGINEER
ROBERT K. HOLT
No.27943
EXPIRES 03-31-98
CIVIL
STATE OF CALIFORNIA

APPROVED: _____ DATE _____

APPROVED: TOWN ENGINEER Robert K. Holt R.C.E. 27943

REVISION	BY	DATE

Town of Yucca Valley

CATCH BASIN REINFORCEMENT

STANDARD DRAWING NO. 473

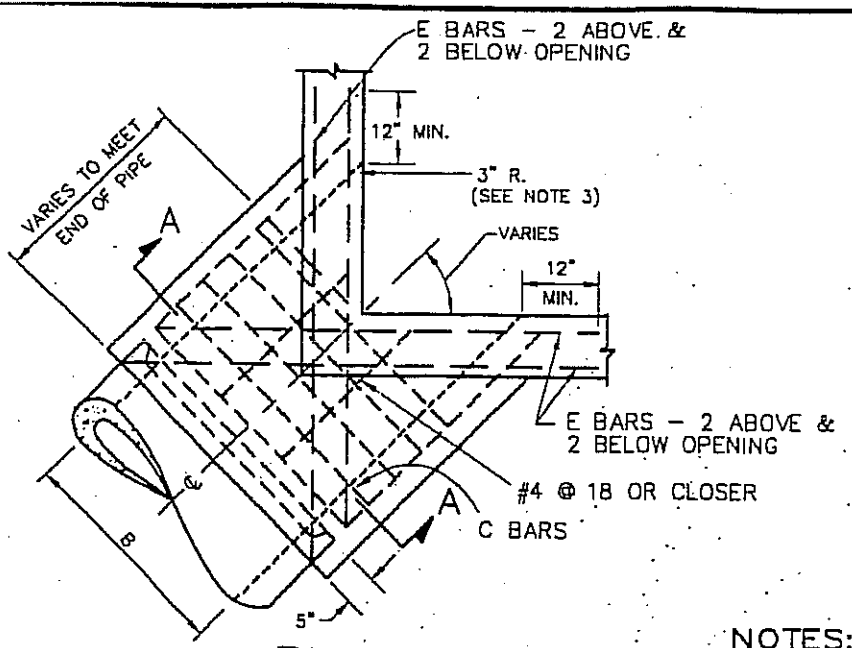

PLAN
CORNER CONNECTION

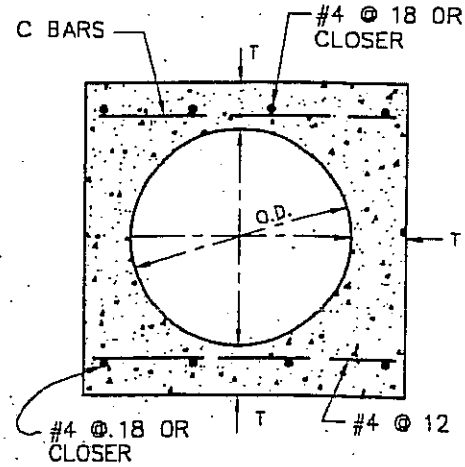

SECTION A–A

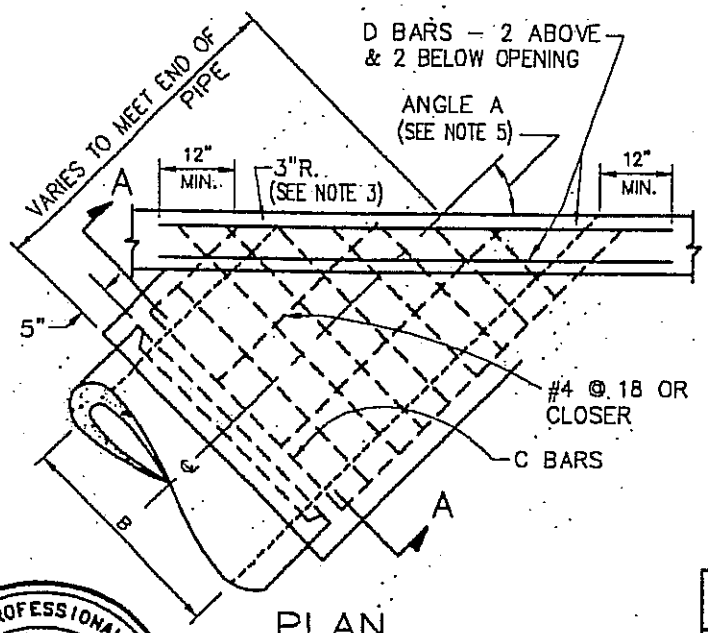

PLAN
SIDE CONNECTION

NOTES:

1. REINFORCING STEEL SHALL BE 1 1/2" CLEAR FROM INSIDE FACE OF CONCRETE UNLESS OTHERWISE SHOWN.
2. REINFORCING STEEL FOR INSIDE FACE OF CATCH BASIN WALL SHALL BE CUT AT CENTER OF OPENING AND BENT INTO WALLS OF MONOLITHIC CONNECTION. RE-INFORCING STEEL FOR OUTSIDE FACE OF CATCH BASIN WALL SHALL BE CUT 2" CLEAR OF OPENING.
3. CONNECTION SHALL BE POURED MONOLITHIC WITH CATCH BASIN. THE ROUNDED EDGE OF OUTLET SHALL BE CONSTRUCTED BY POURING CONCRETE AGAINST A CURVED FORM WITH A RADIUS OF 3".
4. FLOOR OF STRUCTURE SHALL BE STEEL-TROWELED TO SPRING LINE.
5. CONNECTIONS SHALL BE CONSTRUCTED WHERE (A.) PIPES, 12 INCHES THROUGH 72 INCHES IN DIAMETER, INLET OR OUTLET THROUGH CORNER OF CATCH BASIN AT AN ANGLE LESS THAN 40° (B.) ANGLE A, FOR PIPES 24 INCHES THROUGH 30 INCHES IN DIAMETER, IS LESS THAN 45°.

B	T	C BARS	D & E BARS	B	T	C BARS	D & E BARS
12"	4"	#4 @ 6	#5	42"	7 1/2"	#5 @ 6	#6
15"	4 1/4"			45"	7 3/4"		
18"	4 1/2"			48"	8"		
21"	5"			51"	8 1/2"		
24"	5 1/4"			54"	9"		
27"	5 1/2"			57"	9 1/4"		
30"	6"			60"	9 1/2"		
33"	6 1/4"			63"	10"		
36"	6 1/2"			66"	10 1/4"		
39"	7"			69"	10 3/4"		
				72"	1'		

REGISTERED PROFESSIONAL ENGINEER
ROBERT K. HOLT
No.27943
EXPIRES 03-31-98
CIVIL
STATE OF CALIFORNIA

APPROVED: _____ DATE _____

APPROVED: TOWN ENGINEER Robert K. Holt R.C.E. 27943

REVISION	BY	DATE

Town of Yucca Valley

SPECIAL CONNECTIONS TO CATCH BASIN

STANDARD DRAWING NO. 474

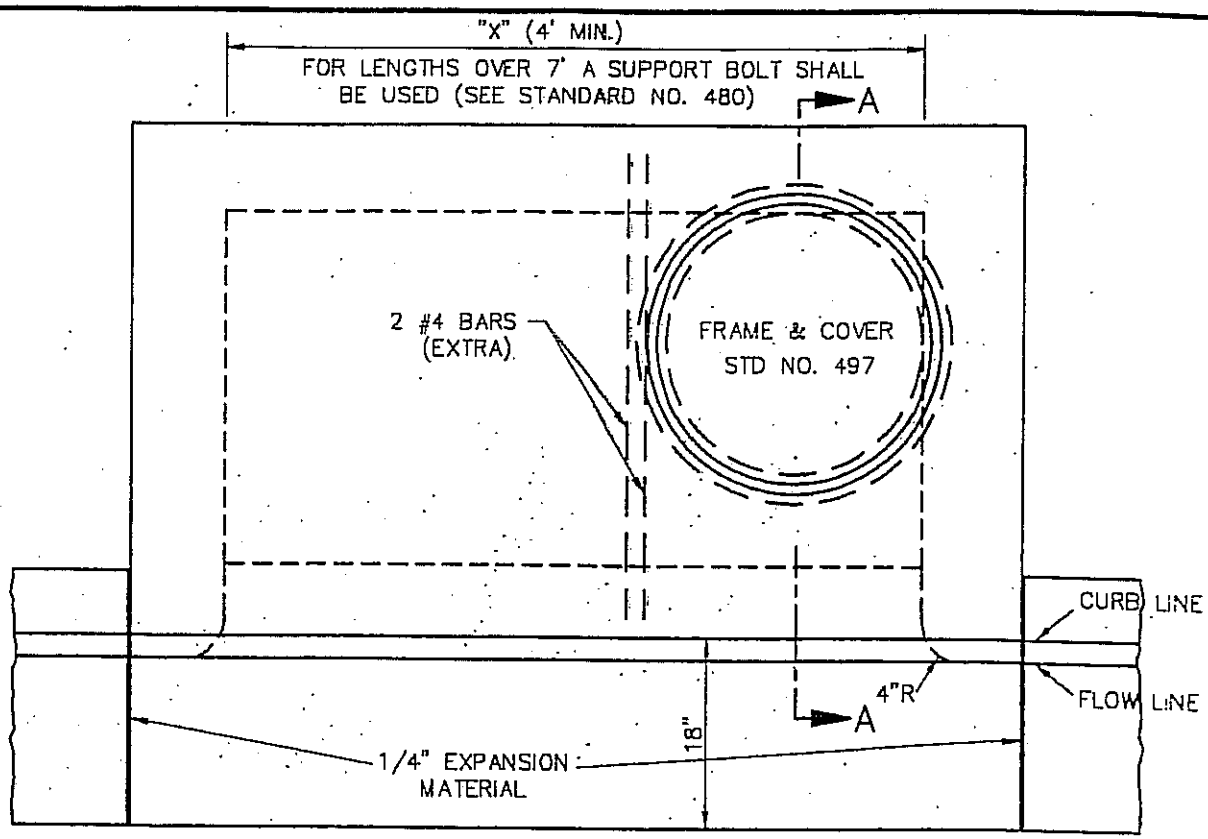

NOTES:

1. ALL REINFORCING SHALL BE #4 BARS AT 12" O.C. BOTH WAYS IN TOP SLAB AND WALLS.
2. CATCH BASIN SHALL BE CONSTRUCTED OF CLASS "A" CONCRETE.
3. CURB & GUTTER ADJOINING CATCH BASIN SHALL BE CONSTRUCTED PRIOR TO CONSTRUCTING TOP OF CATCH BASIN.

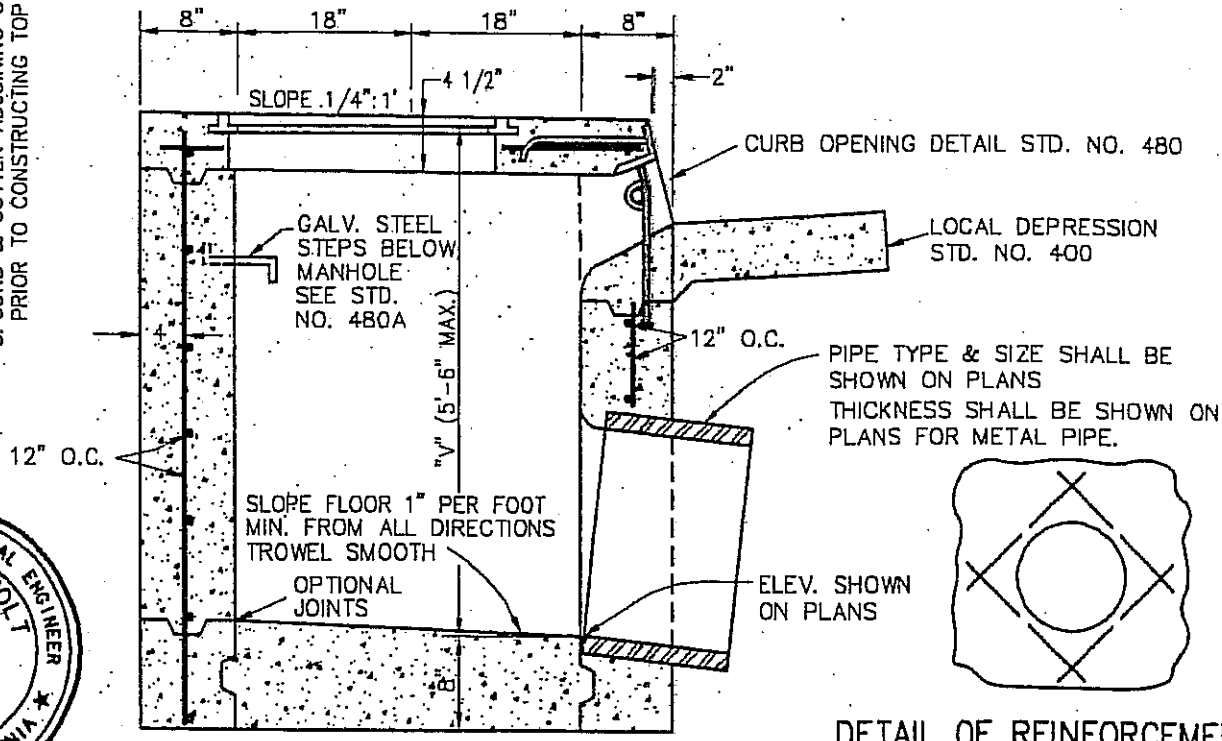

SECTION A-A

DETAIL OF REINFORCEMENT AROUND PIPE

REGISTERED PROFESSIONAL ENGINEER
ROBERT K. HOLT
No.27943
EXPIRES 03-31-98
CIVIL
STATE OF CALIFORNIA

APPROVED: _____ DATE _____

APPROVED: TOWN ENGINEER Robert K. Holt R.C.E. 27943

REVISION	BY	DATE

Town of Yucca Valley

TYPE "A"
CATCH BASIN

STANDARD DRAWING NO. 475

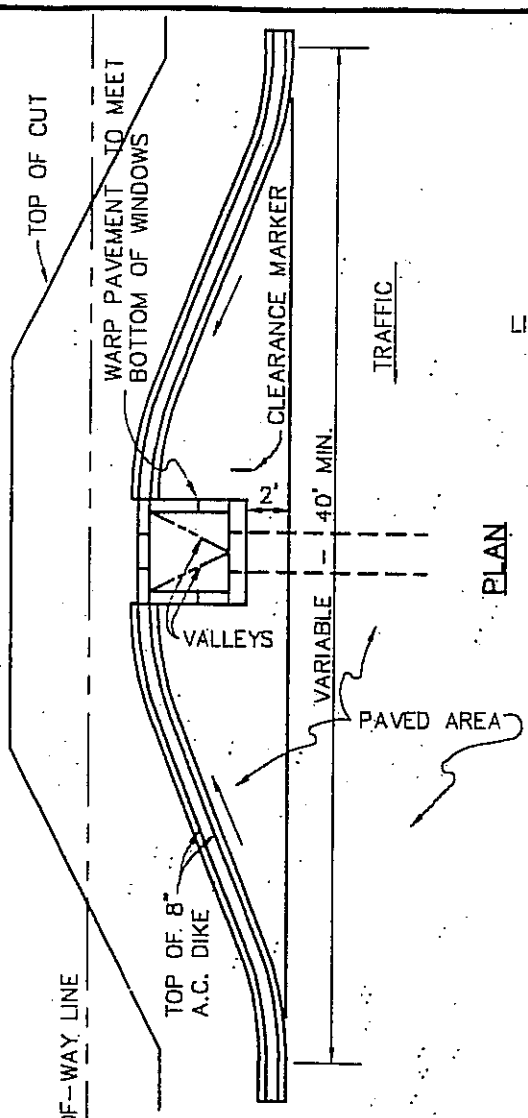

PLAN

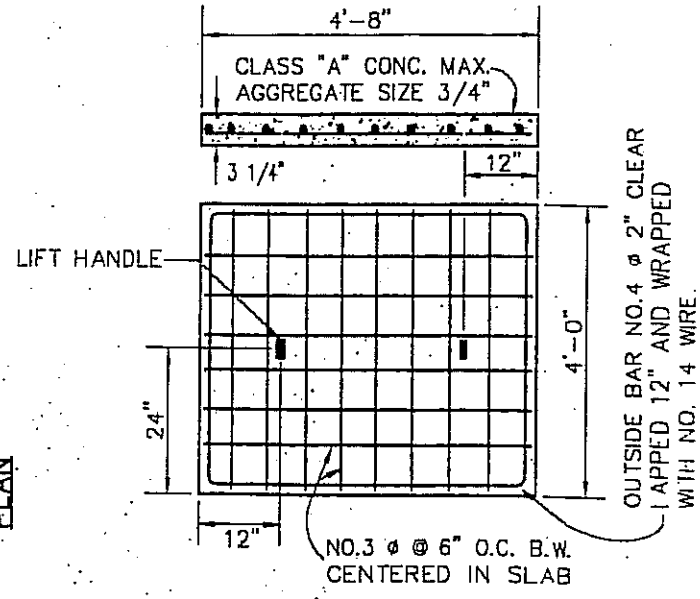

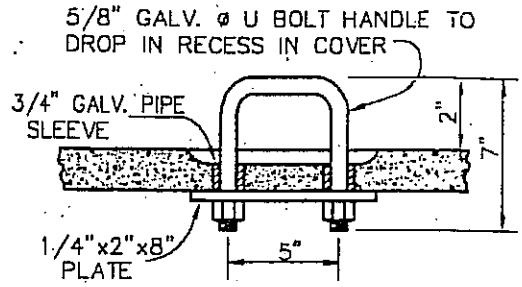

CONC. COVER AND HANDLE DETAIL

VARIABLE – MIN. 40'

CLEAR R/W OF ALL TREES, STUMPS, BRUSH, ETC. CLEAR SLOPES AND DEDICATE SLOPE RIGHTS. NO BRUSH, STUMPS, ETC., TO BE USED IN FILLS.

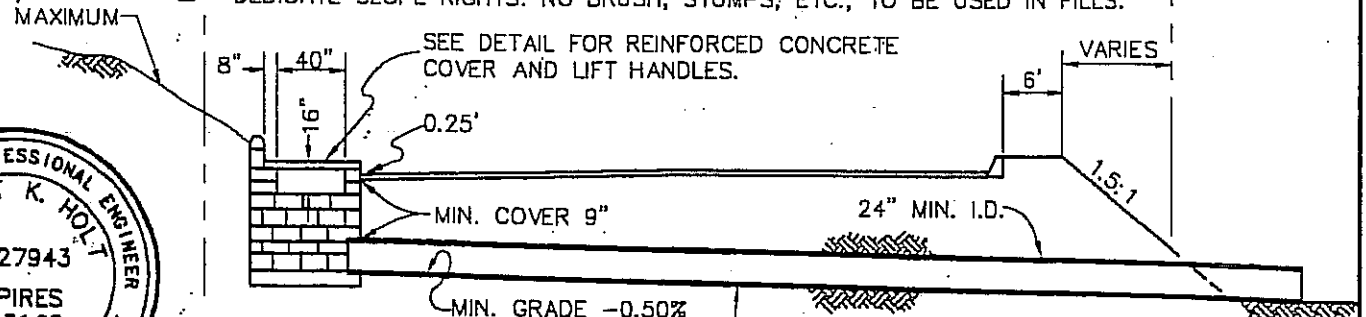

PROFILE

REGISTERED PROFESSIONAL ENGINEER
ROBERT K. HOLT
No.27943
EXPIRES 03-31-98
CIVIL
STATE OF CALIFORNIA

NOTES:

FOR CONSTRUCTION DETAILS OF CATCH BASIN SEE STD. NO. 448A.

APPROVED: _____ DATE _____

APPROVED: TOWN ENGINEER Robert K. Holt R.C.E. 27943

REVISION	BY	DATE

Town of Yucca Valley

CATCH BASIN
MOUNTAIN ROADS

STANDARD DRAWING NO. 476

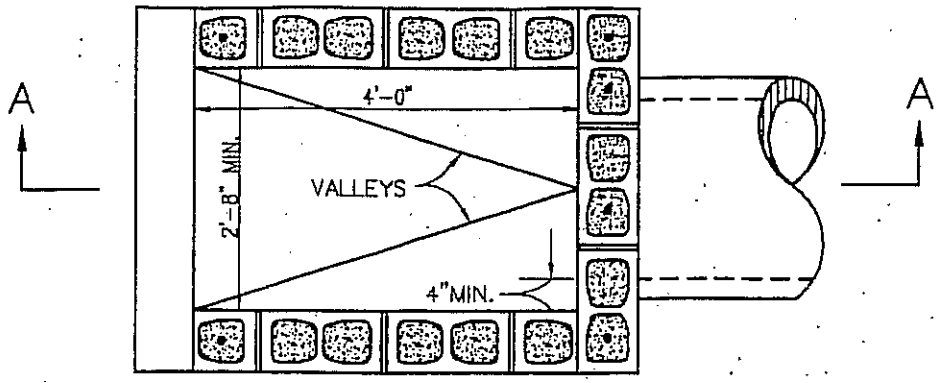

PLAN

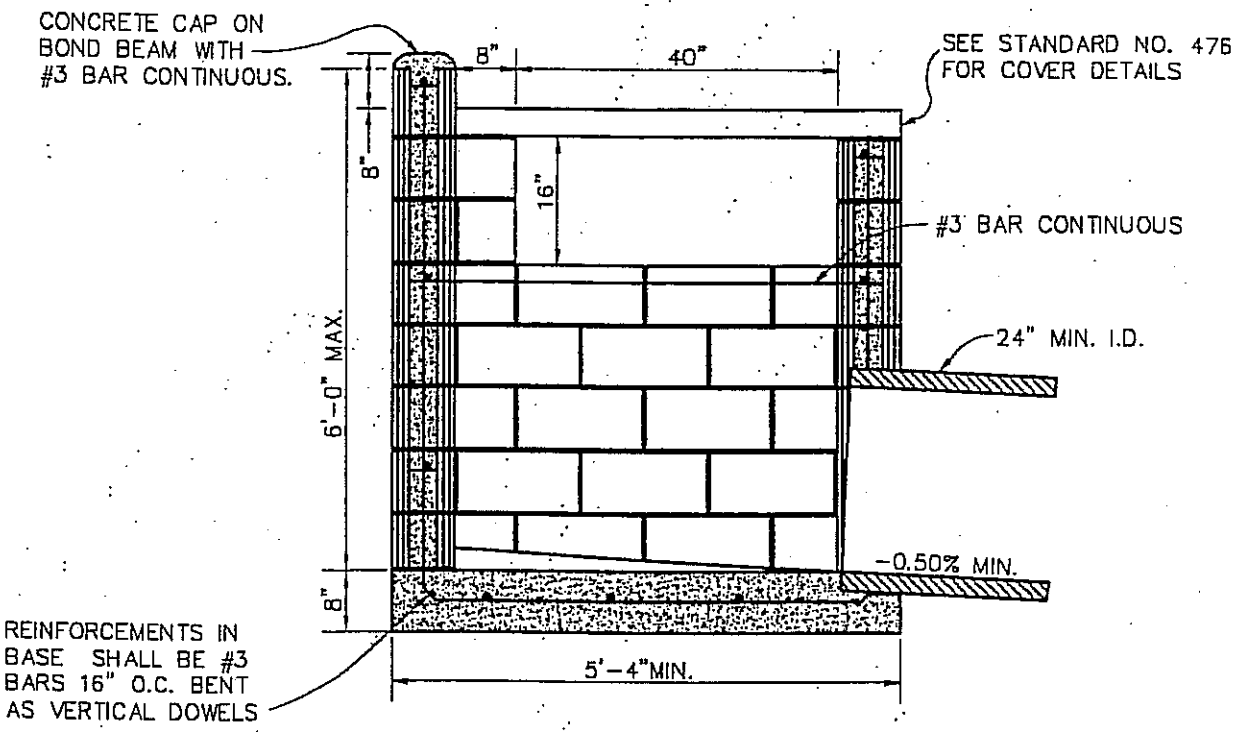

SECTION A–A

REGISTERED PROFESSIONAL ENGINEER
ROBERT K. HOLT
No.27943
EXPIRES 03-31-98
CIVIL
STATE OF CALIFORNIA

NOTES:

1. 8"x8"x16" CONC. BLOCK WITH #3 STEEL 16" O.C. VERT. AND 24" O.C. HORIZ.
2. FILL ALL BLOCKS WITH GROUT.
3. BASE OF CATCH BASIN SHALL BE CONSTRUCTED WITH CLASS 'B' CONCRETE.
4. HORIZONTAL STEEL SHALL BE PLACED IN BOND BEAM BLOCKS.

APPROVED: _____ DATE _____

APPROVED: TOWN ENGINEER Robert K. Holt R.C.E. 27943

REVISION	BY	DATE

Town of Yucca Valley

CATCH BASIN
MOUNTAIN ROADS

STANDARD DRAWING NO. 476A

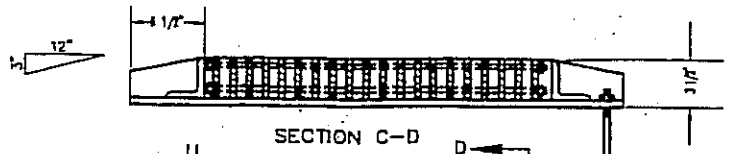

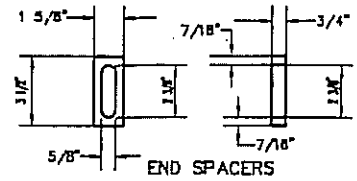

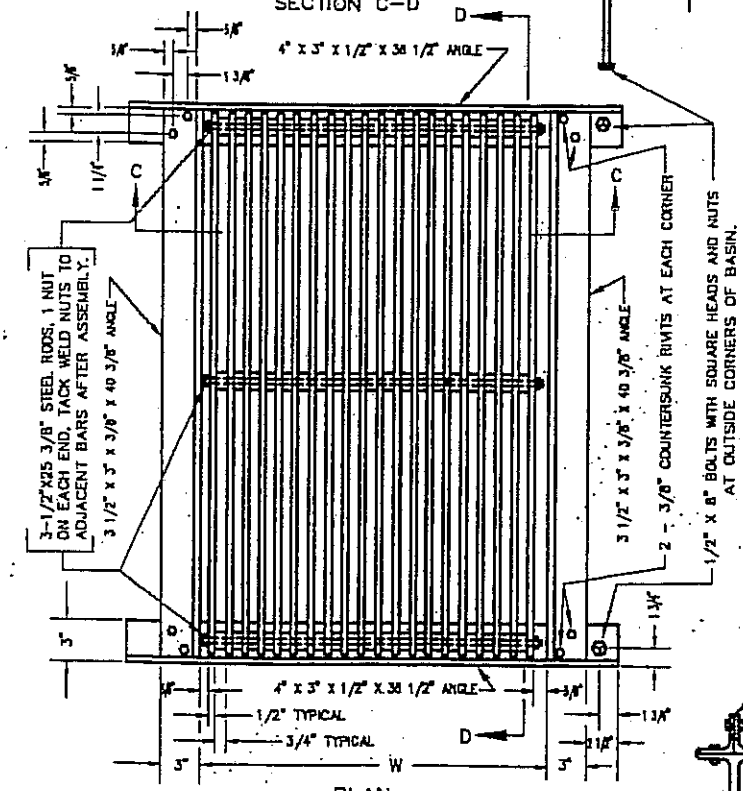

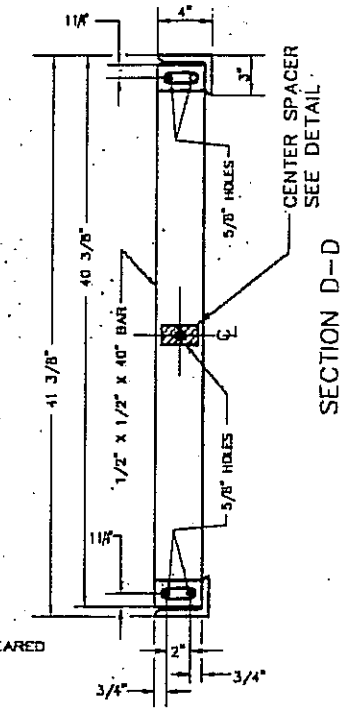

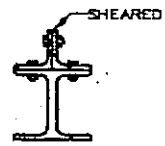

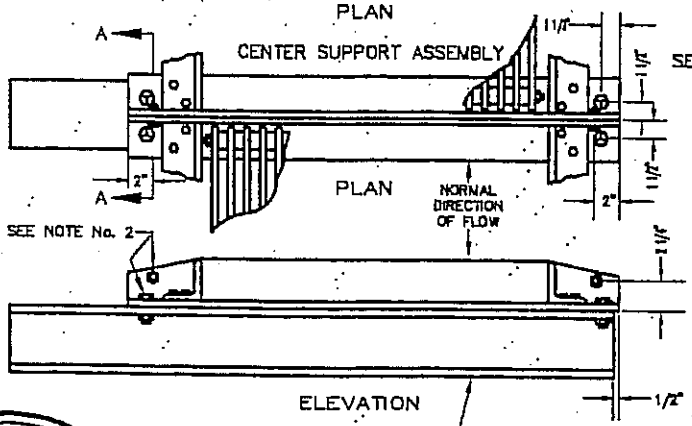

NOTES:

1. CENTER SUPPORT ASSEMBLY SHALL BE USED WHEN TWO OR MORE GRATINGS ARE SPECIFIED.
2. ALL BOLTS USED IN CENTER SUPPORT SHALL BE 1/2".
3. FRAME MAY BE RIVETED OR WELDED.
4. BOLTS (NOT RIVETS OR WELDS) SHALL BE USED TO JOIN TWO OR MORE FRAMES TOGETHER AND TO THE "H" BEAM.
5. DETAIL OF END SPACERS SHOWS FINISHED DIMENSIONS.
6. ALL PARTS SHALL BE OF STRUCTURAL GRADE STEEL EXCEPT END SPACERS, WHICH MAY BE OF EITHER CAST IRON OR STEEL.
7. ALL EXPOSED METAL PARTS SHALL BE GALVANIZED PRIOR TO ASSEMBLY. WELDING, MACHINING, AND DRILLING SHALL BE DONE BEFORE GALVANIZING. ALL DEMINSIONS ARE FINISHED DIMENSIONS AND INCLUDE GALVANIZING.
8. TOTAL WEIGHT - 580 LBS. FOR GRATE SHOWN.

44" LONG FOR CATCH BASIN - NO. 4 WITH GRATE SHOWN.
42" LONG FOR CATCH BASIN - NO. 4 WITH CALTRANS GRATE.

REGISTERED PROFESSIONAL ENGINEER
ROBERT K. HOLT
No.27943
EXPIRES 03-31-98
CIVIL
STATE OF CALIFORNIA

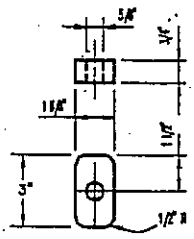

CENTER SPACER

W	GRATE TYPE
25 1/2"	AS SHOWN ABOVE
24"	CALTRANS STD. D77-B

APPROVED: _____ DATE _____

APPROVED: TOWN ENGINEER Robert K. Holt R.C.E. 27943

REVISION	BY	DATE

Town of Yucca Valley

CATCH BASIN GRATE

STANDARD DRAWING NO. 477

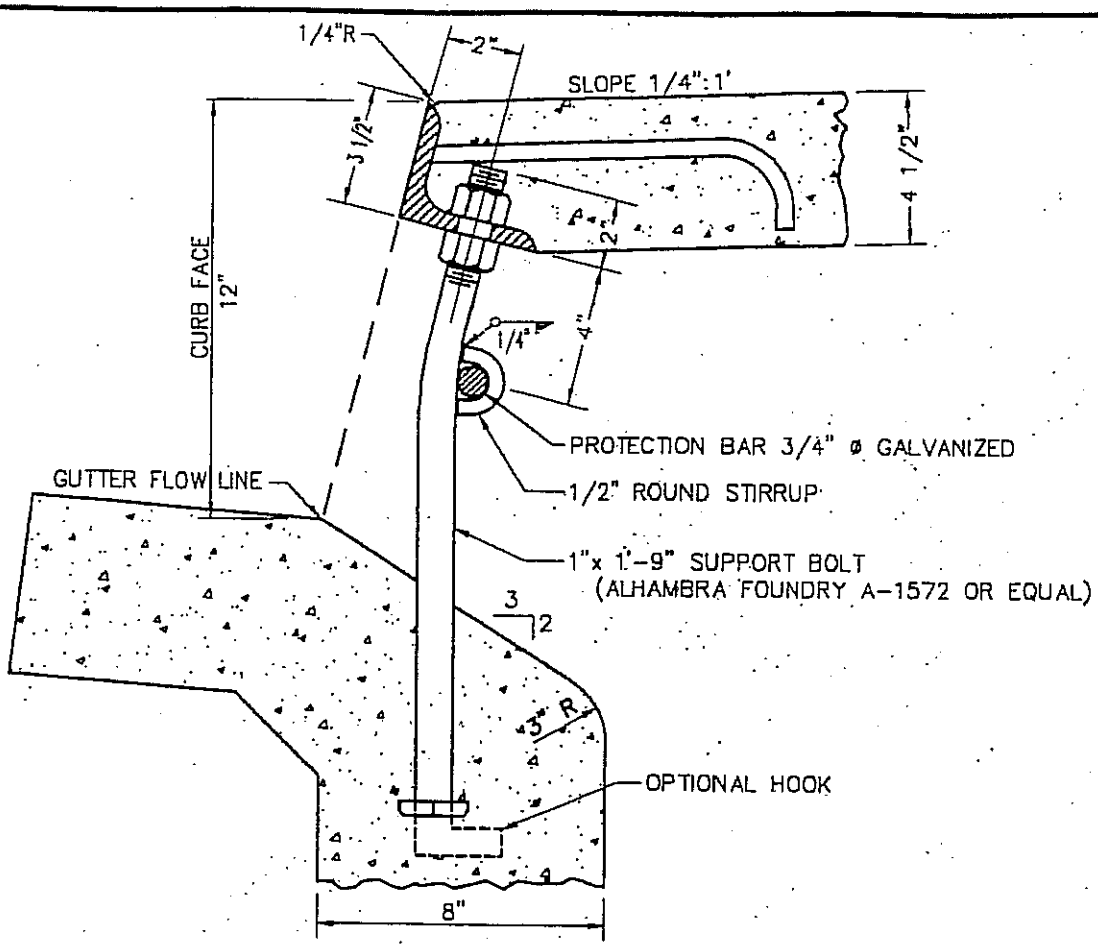

STEEL ANGLE & SUPPORT BOLT DETAIL

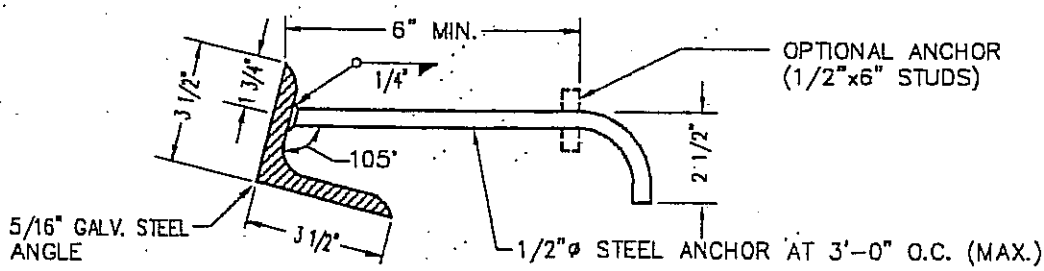

LENGTH SHALL BE OPENING WIDTH PLUS 12 INCHES.

STEEL ANGLE ANCHOR

REGISTERED PROFESSIONAL ENGINEER
ROBERT K. HOLT
No.27943
EXPIRES
03-31-98
CIVIL
STATE OF CALIFORNIA

NOTES:

1. A PLAIN ROUND GALVANIZED STEEL PROTECTION BAR 3/4" IN DIA. SHALL BE INSTALLED AND EMBEDDED 6" AT EACH END.
2. ALL EXPOSED METAL PARTS SHALL BE GALVANIZED. (EXCEPT FRAME AND COVER)
3. SUPPORT BOLTS SHALL BE UNIFORMLY SPACED BUT NOT TO EXCEED 7' ON CENTER.
4. STEEL ANGLE SHALL BE BENT TO MATCH CURB ALIGNMENT.

APPROVED: _____ DATE _____

APPROVED: TOWN ENGINEER Robert K. Holt R.C.E. 27943

REVISION	BY	DATE

Town of Yucca Valley

CATCH BASIN OPENING

STANDARD DRAWING NO. 480

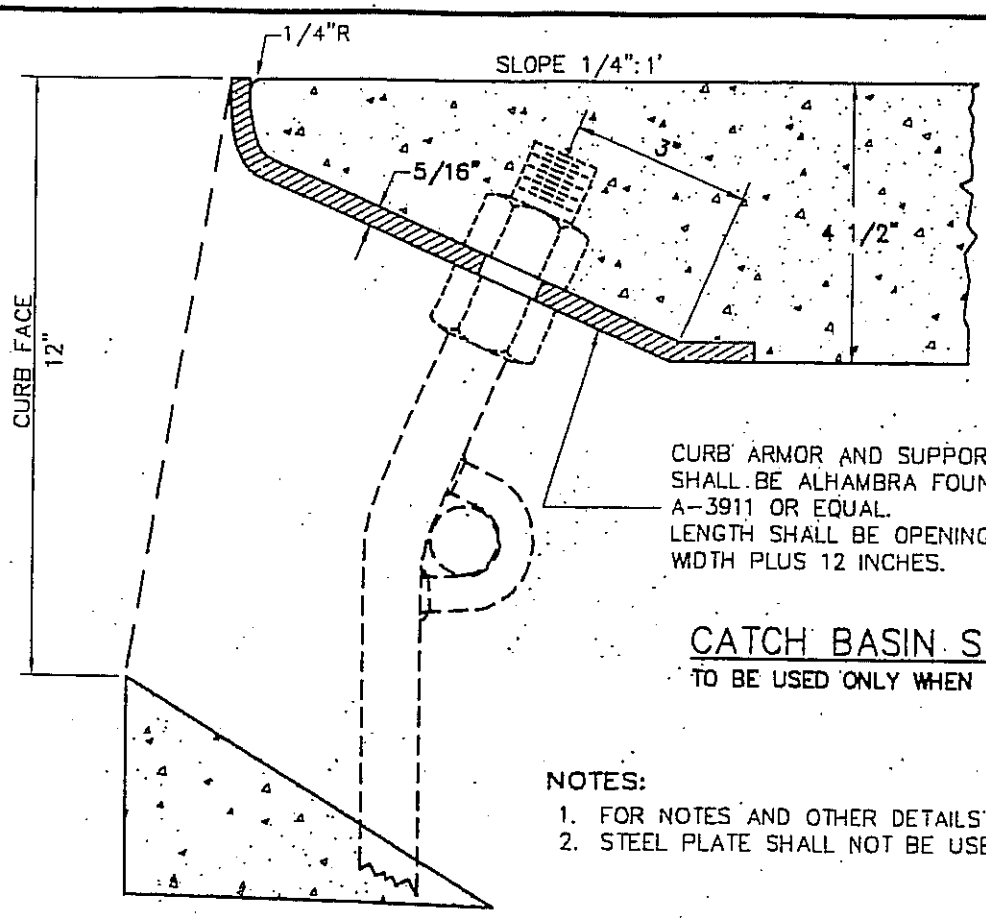

CURB ARMOR AND SUPPORT BOLTS SHALL BE ALHAMBRA FOUNDRY A-3911 OR EQUAL. LENGTH SHALL BE OPENING WIDTH PLUS 12 INCHES.

CATCH BASIN STEEL PLATE

TO BE USED ONLY WHEN SHOWN ON PLANS

NOTES:

1. FOR NOTES AND OTHER DETAILS SEE STD. NO. 480.
2. STEEL PLATE SHALL NOT BE USED ON CURVES.

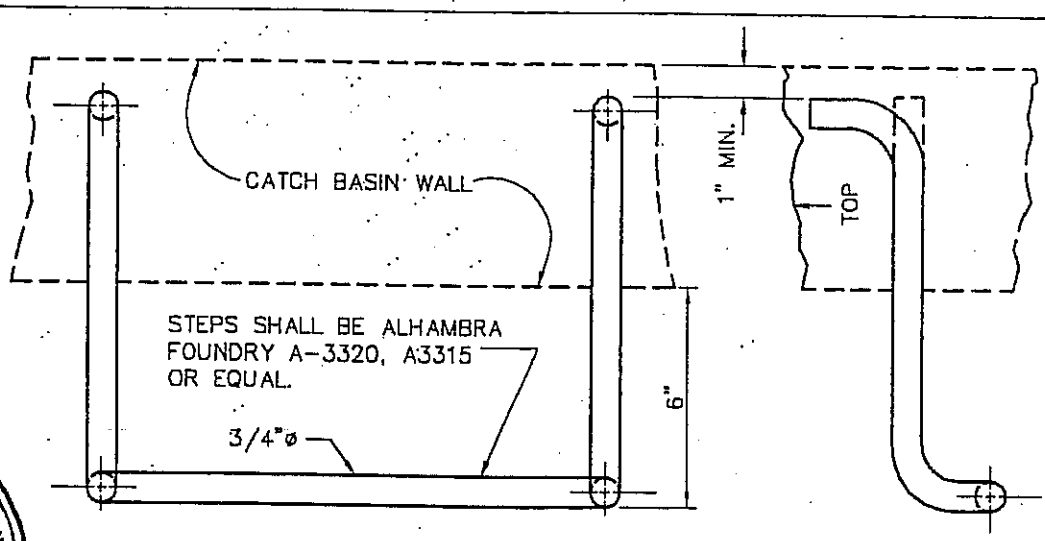

GALVANIZED STEEL STEP

REGISTERED PROFESSIONAL ENGINEER
ROBERT K. HOLT
No.27943
EXPIRES 03-31-98
CIVIL
STATE OF CALIFORNIA

NOTES:

1. STEPS – NONE REQUIRED WHERE "V" IS 3'-6" OR LESS. INSTALL ONE STEP 16"± ABOVE FLOOR WHEN "V" IS MORE THAN 3'-6" AND LESS THAN 5'-0". WHERE "V" IS MORE THAN 5'-0" STEPS SHALL BE EVENLY SPACED @ 12"± INTERVALS FROM 16"± ABOVE THE FLOOR TO WITHIN 12"± FROM THE TOP OF THE BOX. PLACE STEPS IN WALL WITHOUT PIPE OPENINGS AND UNDER MANHOLE.

APPROVED: _____ DATE _____

APPROVED: TOWN ENGINEER Robert K. Holt R.C.E. 27943

REVISION	BY	DATE

Town of Yucca Valley

CATCH BASIN STEEL PLATE
GALVANIZED STEEL STEP

STANDARD DRAWING NO. 480A

"W" (INCL)	NUMBER OF SUPPORT BOLTS	NUMBER OF "X" LENGTHS
5' to 10'	1	2
10' to 15'	2	3
15' to 20'	3	4
20' to 25'	4	5
25' to 30'	5	6

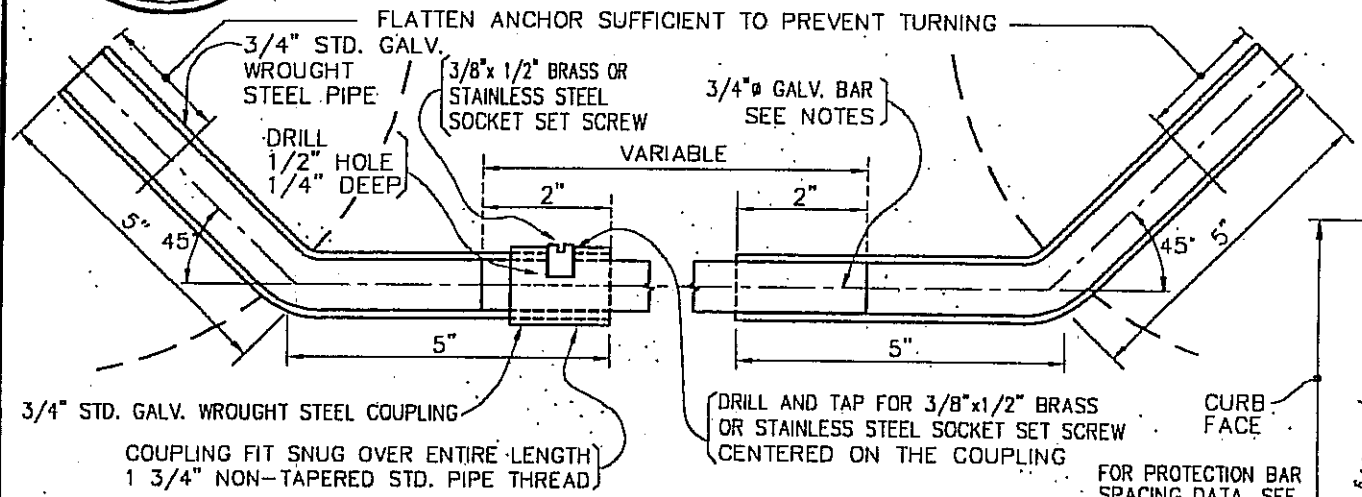

DETAIL OF ANCHOR

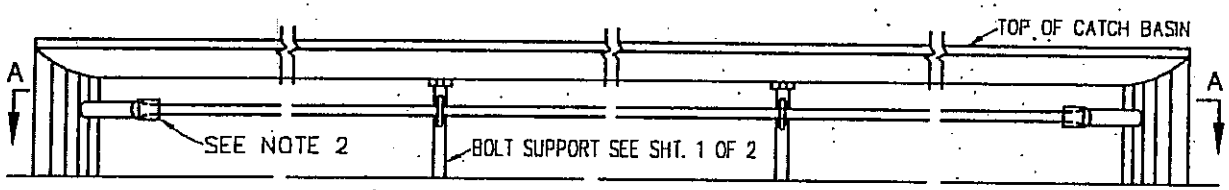

ELEVATION

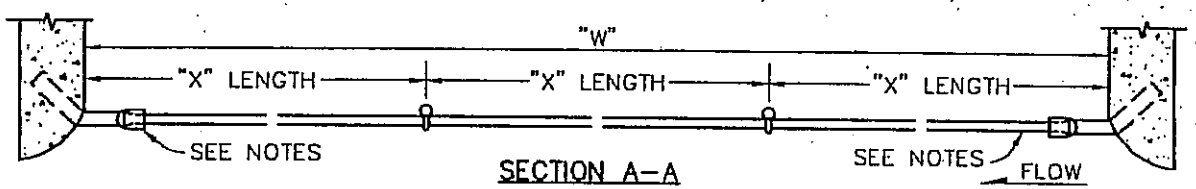

SECTION A–A

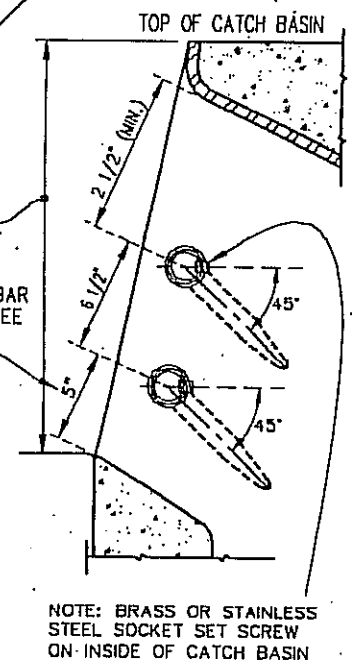

SECTION SHOWING LOCATION OF ANCHOR AT WALL OF CATCH BASIN

NOTES:

1. ALL BARS SHALL BE 3/4" GALV. HOT-ROLLED STEEL PER A.S.T.M. DESIGNATION A-36. BAR LENGTHS SHALL NOT EXCEED 21' AND SHALL BE CUT TO FIT IN THE FIELD. WHEN "W" IS OVER 21', PROTECTION BAR SHALL CONSIST OF TWO OR MORE SECTIONS DEPENDING UPON LENGTH OF BASIN. LOCATION OF SPECIAL SUPPORT BARS AND ADDITIONAL SOCKET SET SCREW TO BE DETERMINED BY THE ENGINEER IN THE FIELD.
2. INSTALL COUPLING AT DOWNSTREAM END OF CATCH BASIN OPENING.

REGISTERED PROFESSIONAL ENGINEER ROBERT K. HOLT No. 27943 EXPIRES 03-31-98 CIVIL STATE OF CALIFORNIA

APPROVED: TOWN ENGINEER

R.C.E. 27943

DATE

APPROVED:

REVISION	BY	DATE

Town of Yucca Valley

REMOVABLE PROTECTION BAR FOR CATCH BASINS

STANDARD DRAWING NO. 481

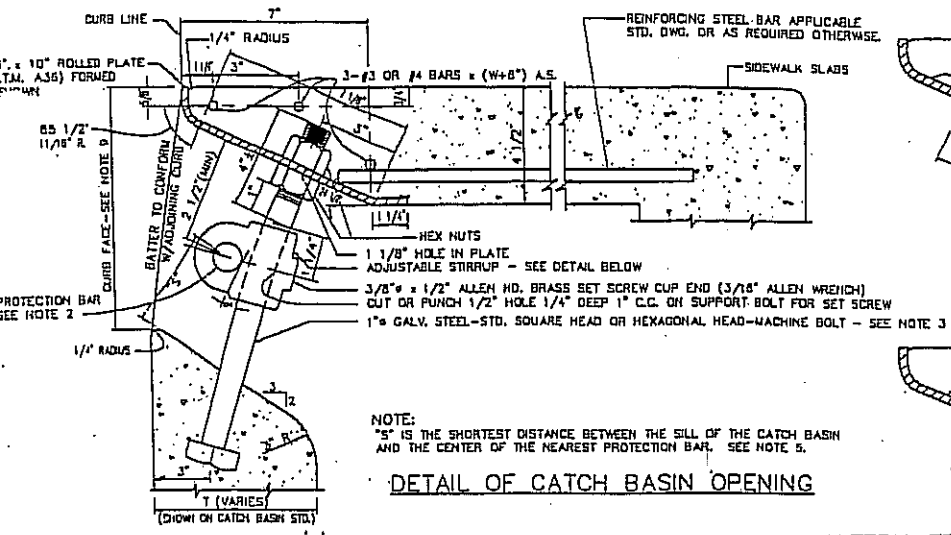

NOTE:
"S" IS THE SHORTEST DISTANCE BETWEEN THE SILL OF THE CATCH BASIN AND THE CENTER OF THE NEAREST PROTECTION BAR. SEE NOTE 5.

DETAIL OF CATCH BASIN OPENING

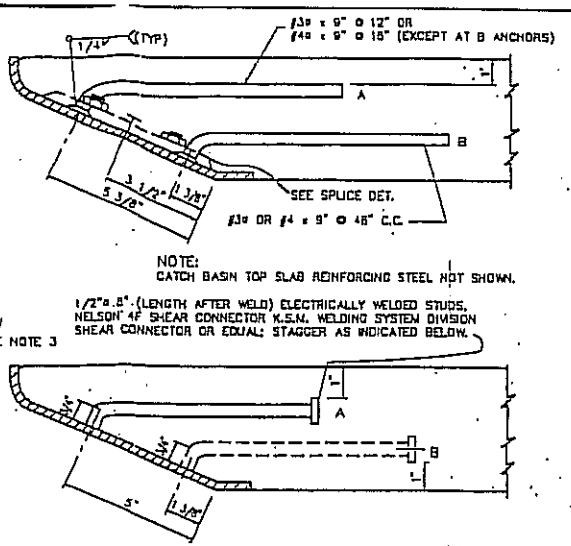

NOTE:
CATCH BASIN TOP SLAB REINFORCING STEEL NOT SHOWN.

ALTERNATE METHODS FOR FACE PLATE ANCHORAGE

NOTE: REINFORCING STEEL AND SPLICE NOT SHOWN.
SPACE "A" ANCHORS, APPROXIMATELY EVENLY AT 15" MAX. C.C. BETWEEN END ANCHORS AND ANCHORS AT SPLICE JOINTS EXCEPT OMIT AT "B" ANCHOR LOCATION. SPACE "B" ANCHORS AT APPROXIMATELY 45" MAX. BETWEEN END ANCHORS.

NOTES:

1. SUPPORT BOLT ANGLE "a" SHALL VARY TO CONFORM WITH BATTER OF ADJOINING CURB.
2. PROTECTION BAR SHALL BE INSTALLED AND SUPPORT BOLTS SPACED ACCORDING TO STANDARD DRAWING NO. C8103A SHT. 1 of 2.
3. SUPPORT BOLTS SHALL BE EQUAL IN LENGTH TO CURB FACE +4"± FOR ALL CURB BATTERS.
4. ALL EXPOSED METAL PARTS SHALL BE GALVANIZED AFTER FABRICATION.
5. PROTECTION BAR SPACING: PROTECTION BAR(S) SHALL BE INSTALLED WHEN THE MINIMUM CLEAR OPENING OF THE CATCH BASIN EXCEEDS 8" BARS(S) AND SHALL BE PLACED SUCH THAT NO MINIMUM CLEAR OPENING EXCEEDS 6".

(A) WHEN ONE BAR IS REQUIRED, "S" SHALL BE 6 3/4", HOWEVER, THIS SHALL BE REDUCED IF NECESSARY SO THAT THE CENTER OF THE PROTECTION BAR IS NOT LESS THAN 2 1/2" FROM THE ROLLED PLATE.

(B) WHEN TWO OR MORE BARS ARE REQUIRED, "S" SHALL BE 6 3/4" WITH REMAINING BARS SPACED AT 6 3/4" C.C. THE SPACING OF THE TOP BAR SHALL BE REDUCED IF NECESSARY SO THAT THE CENTER OF THE BAR IS NOT LESS THAN 2 1/2" FROM THE ROLLED PLATE.

6. WHERE CATCH BASINS ARE TO BE CONSTRUCTED ON CURVES, THE MAXIMUM CHORD LENGTH FOR FACE PLATE SHALL BE SUCH THAT THE MAXIMUM DIMENSION FROM SAID CHORD (MEASURED PERPENDICULAR THERETO) TO THE TRUE CURVE WILL NOT EXCEED ONE INCH. WHERE MORE THAN ONE CHORD IS REQUIRED, CHORD LENGTH SHALL BE EQUAL.
7. WHERE LENGTH OF FACE PLATE IS BETWEEN 22' AND 43', TWO SECTIONS MAY BE USED. WHEN LENGTH EXCEEDS 43', THREE SECTIONS MAY BE USED. SECTIONS SHALL BE SPLICED ACCORDING TO THE SPLICE DETAIL. SPLICES SHALL BE PLACED ONE FOOT FROM SUPPORT BOLT. SEE STD. NO. 481A, SHT. 2 OF 2.
8. LENGTH OF FACE PLATE IS 'W' + 12" FOR ALL CATCH BASINS EXCEPT THE DRIVEWAY CATCH BASIN.
9. CATCH BASIN OPENING = NORMAL CURB FACE + 4" INCHES UNLESS OTHERWISE SPECIFIED.
10. SPACING OF ALL ANCHORAGE:
    A. SET END ANCHORS 3" FROM ENDS OF FACE PLATE.
    B. PLACE ONE "A" ANCHOR AT EACH SIDE OF ANY AND ALL SPLICE JOINTS AND WITHIN 6" THEREOF.

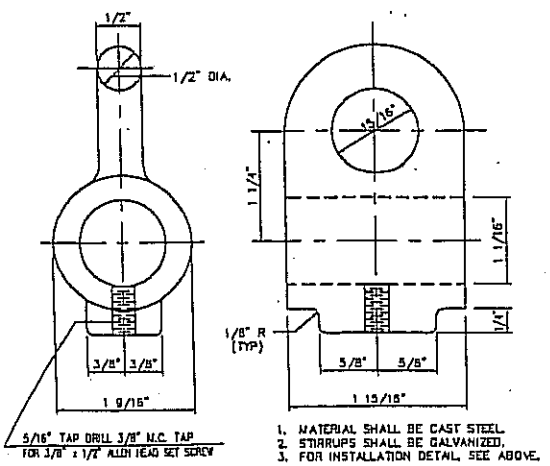

1. MATERIAL SHALL BE CAST STEEL.
2. STIRRUPS SHALL BE GALVANIZED.
3. FOR INSTALLATION DETAIL, SEE ABOVE.

ADJUSTABLE PROTECTION BAR STIRRUP

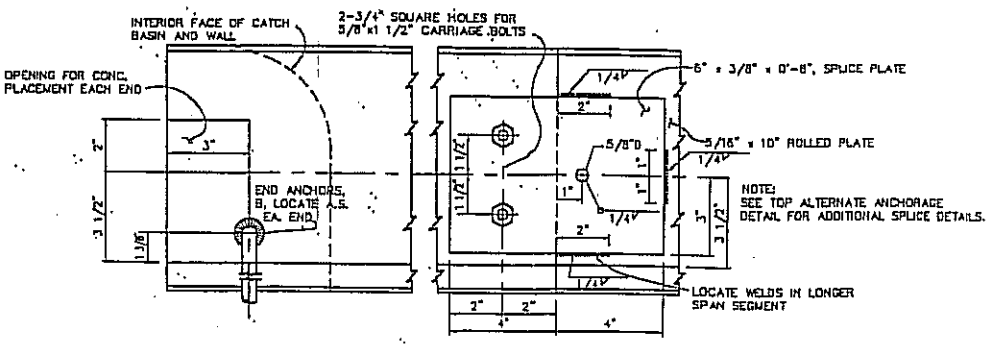

FACE PLATE END & SPLICE DETAILS

REGISTERED PROFESSIONAL ENGINEER ROBERT K. HOLT No.27943 EXPIRES 03-31-98 CIVIL STATE OF CALIFORNIA

APPROVED: _____ DATE _____

APPROVED: TOWN ENGINEER Robert K. Holt R.C.E. 27943

REVISION	BY	DATE

Town of Yucca Valley

DETAIL OF CATCH BASIN OPENING & INSTALLATION DETAILS

STANDARD DRAWING NO. 481A

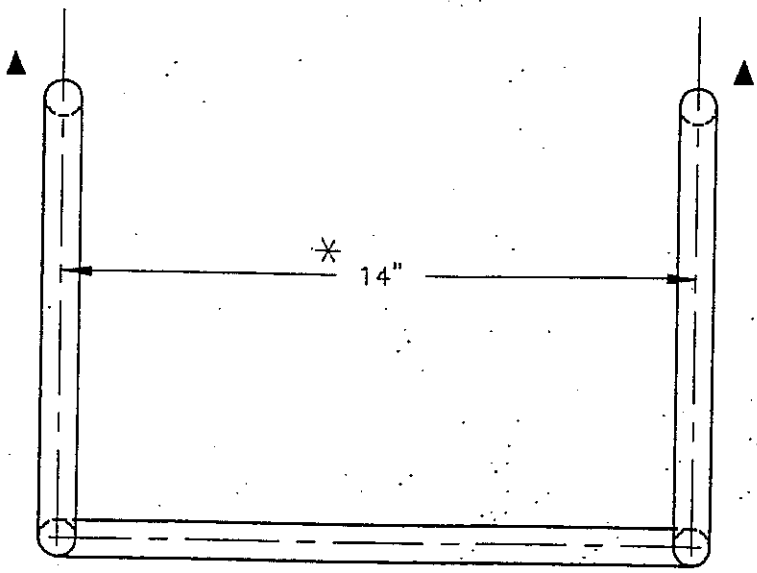

NOTE:
▲ = WHEN STEEL FORMS ARE USED, ELIMINATE HOOK AND USE UPSET END.

PLAN VIEW

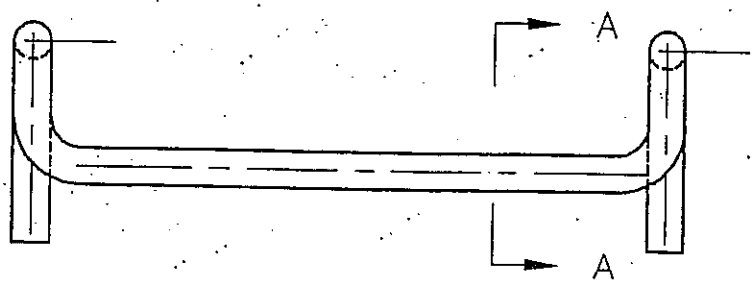

FRONT ELEVATION

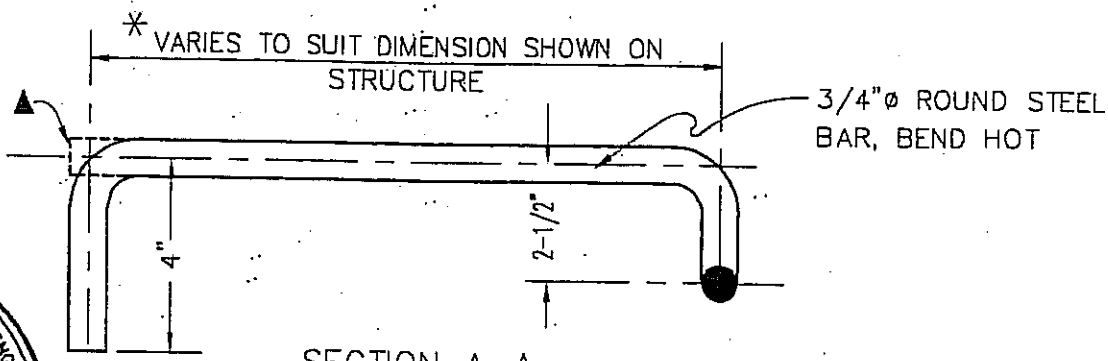

SECTION A–A
GALVANIZE AFTER BENDING

NOTE:
THIS DETAIL SHALL BE USED WHEREVER STEPS ARE REQUIRED.

REGISTERED PROFESSIONAL ENGINEER
ROBERT K. HOLT
No.27943
EXPIRES 03-31-98
CIVIL
STATE OF CALIFORNIA

APPROVED: _____ DATE _____

APPROVED: TOWN ENGINEER Robert K. Holt R.C.E. 27943

REVISION	BY	DATE

Town of Yucca Valley

STANDARD DROP STEP

STANDARD DRAWING NO. 482

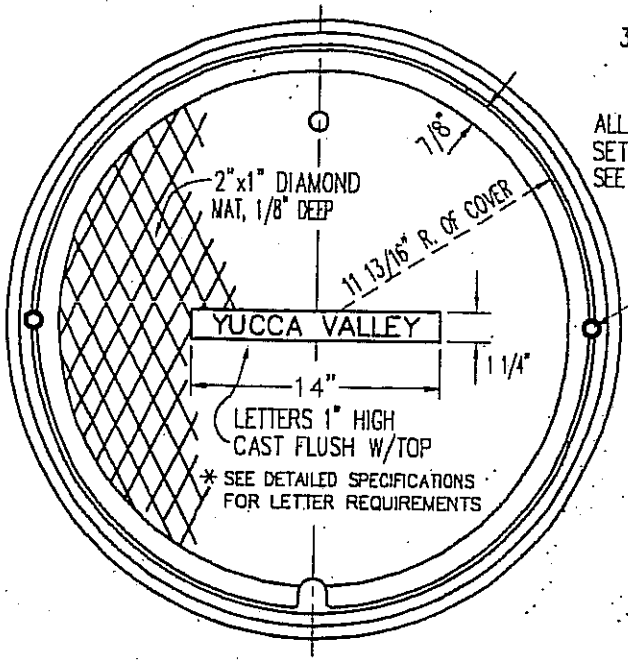

TOP OF MANHOLE FRAME & COVER
TOTAL W.T.=130 lbs.

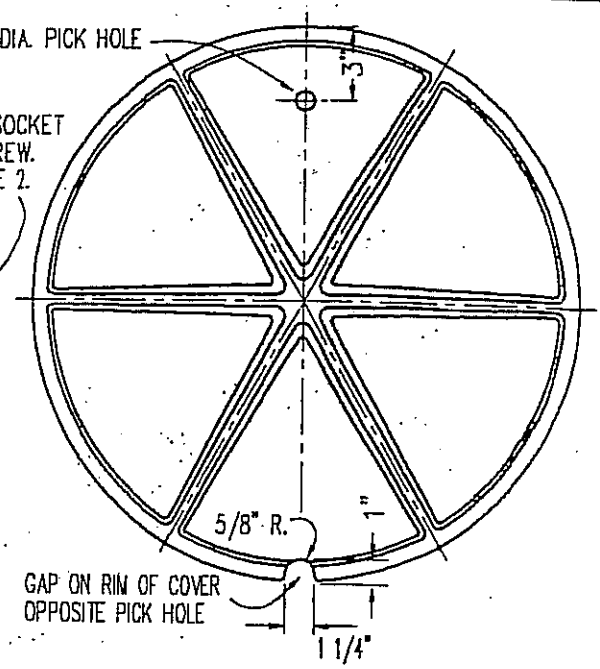

BOTTOM OF MANHOLE COVER

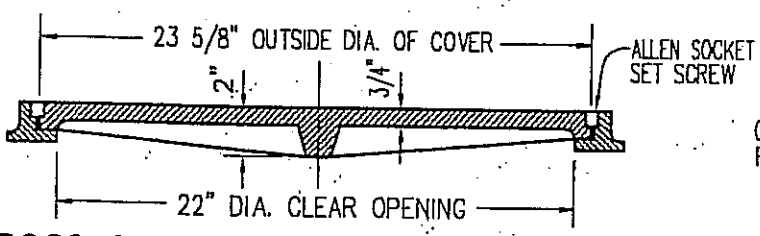

CROSS SECTION THRU FRAME & COVER

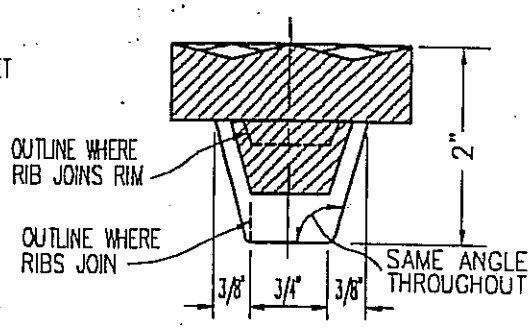

CROSS SECTION THRU RIB AT MID RADIUS

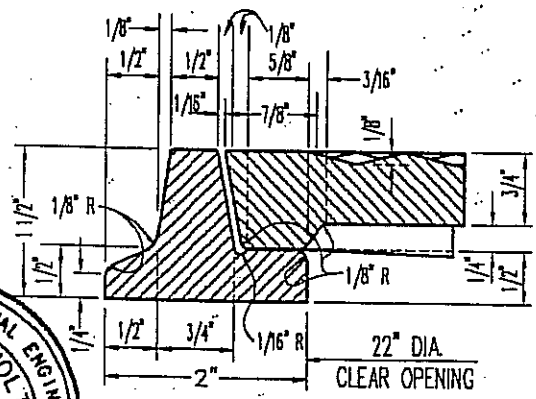

CROSS SECTION THRU RIB

NOTES:

1. FRAME AND COVER SHALL BE GRAY CAST IRON CONFORMING TO THE LATEST A.S.T.M. STANDARD A48, CLASS 30 OR BETTER. GALVANIZE PER A.S.T.M. A385.
2. INSTALL TWO 3/4"x3/4" ALLEN SOCKET SET SCREWS, 90° TO PICK HOLE, IN HOLES DRILLED AND TAPPED 1" IN DEPTH. GALVANIZE PER A.S.T.M. 153.
3. FRAME AND COVER SHALL BE TESTED FOR ACCURACY OF FIT AND SHALL BE MARKED IN SETS BEFORE DELIVERY. RETAP FRAME AS REQUIRED TO SUIT SET SCREWS.

REGISTERED PROFESSIONAL ENGINEER
ROBERT K. HOLT
No.27943
EXPIRES 03-31-98
CIVIL
STATE OF CALIFORNIA

APPROVED: _____ DATE _____

APPROVED: TOWN ENGINEER Robert K. Holt R.C.E. 27943

REVISION	BY	DATE

Town of Yucca Valley

MANHOLE FRAME & COVER FOR CATCH BASINS

STANDARD DRAWING NO. 483

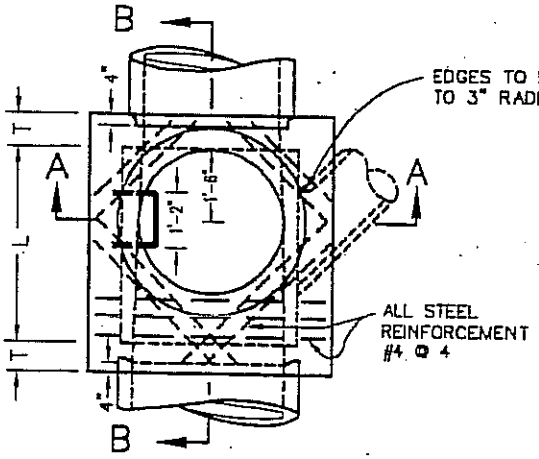

PLAN
(SHAFT NOT SHOWN)

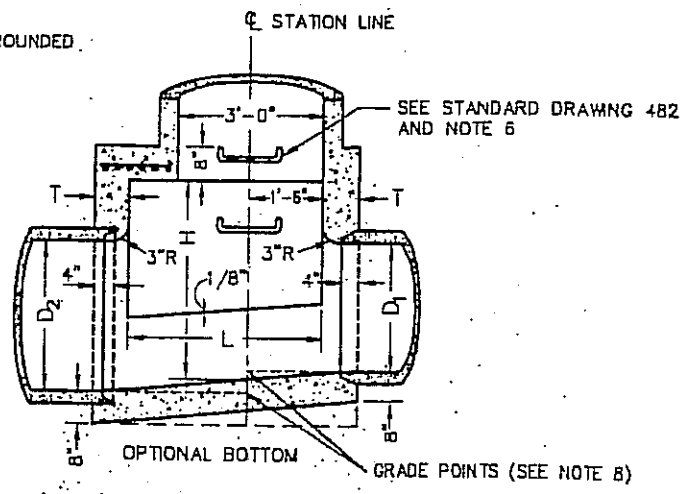

SECTION B-B

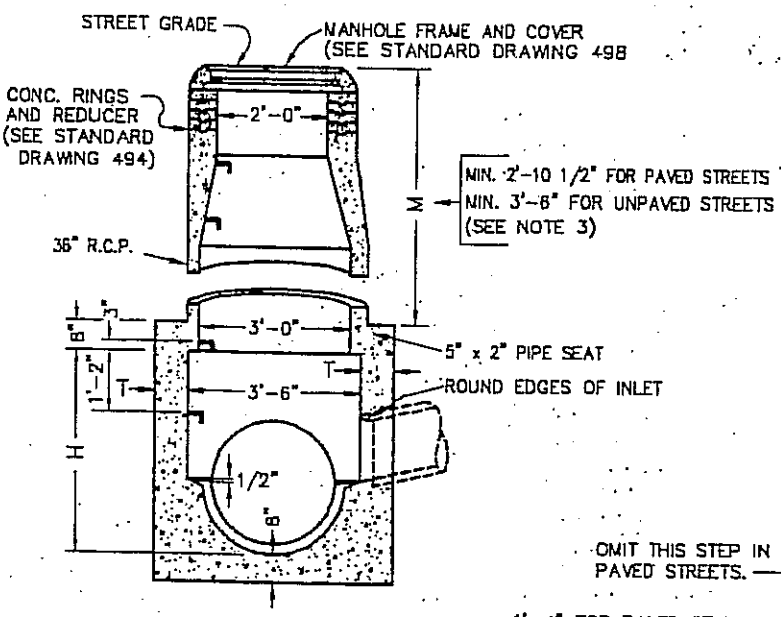

SECTION A-A

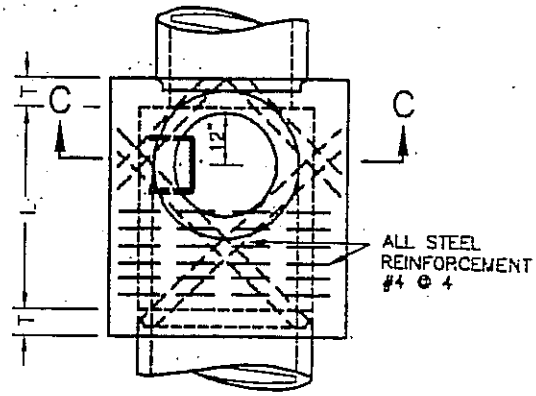

DETAIL N
PLAN
(SHAFT NOT SHOWN, SEE NOTE 3)

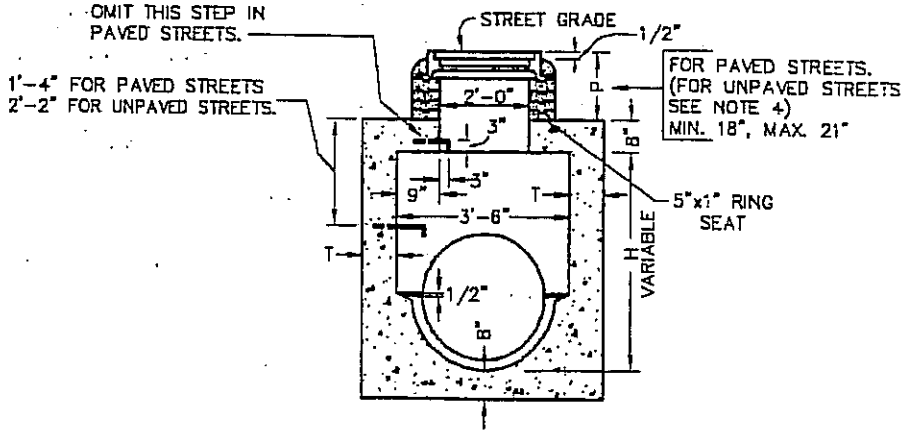

SECTION C-C

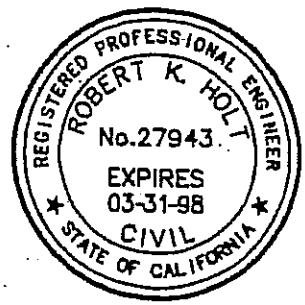

APPROVED: _____ DATE _____

APPROVED: TOWN ENGINEER Robert K. Holt R.C.E. 27943

REVISION	BY	DATE

Town of Yucca Valley

STORM DRAIN
MANHOLE NO. 1
SHEET 1 OF 2

STANDARD DRAWING NO. 490

1. HEIGHT H SHALL BE NOT LESS THAN 4'-0" BUT MAY BE INCREASED AT OPTION OF CONTRACTOR PROVIDED THAT THE VALUE OF M SHALL NOT BE LESS THAN THE MINIMUM SPECIFIED AND THAT THE REDUCER SHALL BE USED. FOR H (IN SEC. C-C) SEE NOTE 4.

2. LENGTH L SHALL BE 4' UNLESS OTHERWISE SHOWN ON IMPROVEMENT PLAN. L MAY BE INCREASED OR LOCATION OF MANHOLE SHIFTED TO MEET PIPE ENDS AT THE OPTION OF THE CONTRACTOR, EXCEPT THAT ANY CHANGE IN LOCATION OF MANHOLE MUST BE APPROVED BY THE ENGINEER.

3. SHAFT SHALL BE CONSTRUCTED AS PER SEC. C-C AND DETAIL N WHEN DEPTH M FROM STREET GRADE TO TOP OF BOX IS LESS THAN 2'-10 1/2" FOR PAVED STREETS OR 3'-6" FOR UNPAVED STREETS.

4. DEPTH P MAY BE REDUCED TO AN ABSOLUTE LIMIT OF 6 INCHES WHEN LARGER VALUES OF P WOULD REDUCE H (IN SEC. C-C) TO BE 3'-6" OR LESS.

5. T SHALL BE 8" FOR VALUES OF H UP TO AND INCLUDING 8 FEET. T SHALL BE 10" FOR VALUES OF H OVER 8 FEET.

6. STEPS SHALL BE 3/4" ROUND, GALVANIZED STEEL AND ANCHORED NOT LESS THAN 4" IN THE WALLS OF STRUCTURES. UNLESS OTHERWISE SHOWN, STEPS SHALL BE SPACED 16" ON CENTER. THE LOWEST STEP SHALL BE NOT MORE THAN 2 FT. ABOVE THE INVERT.

7. REINFORCING STEEL SHALL BE NO. 4 AND 1-1/2" CLEAR FROM INSIDE FACE OF CONCRETE.

8. STATIONS REFER TO PLAN AND PROFILE SHEETS. ELEVATIONS AT ℄ AND PROLONGED INVERT GRADE LINE. SEE NOTE 2 FOR SHIFTING LOCATION.

9. RINGS, REDUCER, AND PIPE FOR ACCESS SHAFT SHALL BE SEATED IN CEMENT MORTAR AND NEATLY POINTED OR WIPED INSIDE SHAFT.

10. FLOOR OF MANHOLE SHALL BE STEEL-TROWELED.

11. CONCRETE SHALL BE CLASS "A".

REGISTERED PROFESSIONAL ENGINEER
ROBERT K. HOLT
No.27943
EXPIRES
03-31-98
CIVIL
STATE OF CALIFORNIA

APPROVED: _____ DATE _____

APPROVED: TOWN ENGINEER Robert K. Holt R.C.E. 27943

REVISION	BY	DATE

Town of Yucca Valley

STORM DRAIN
MANHOLE NO. 1
SHEET 2 OF 2

STANDARD DRAWING NO. 490A

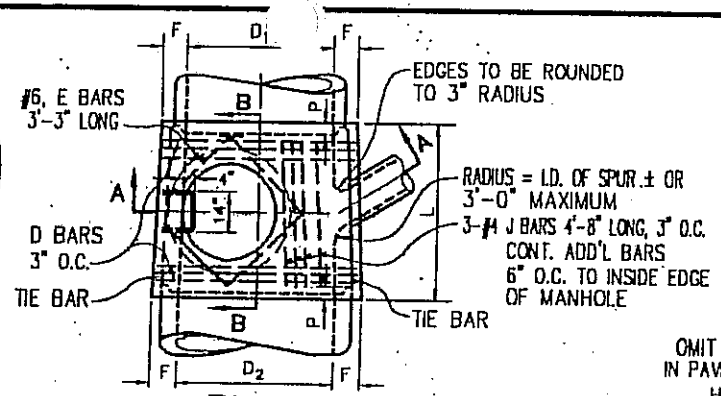

PLAN
(SHAFT NOT SHOWN)

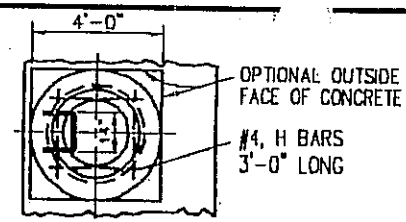

PLAN
(RINGS AND COVER NOT SHOWN)

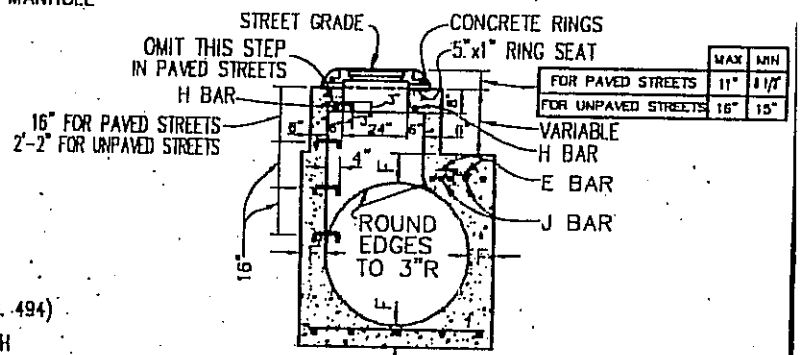

	MAX	MIN
FOR PAVED STREETS	11"	11 1/2"
FOR UNPAVED STREETS	16"	15"

DETAIL M
(SEE NOTE 3)

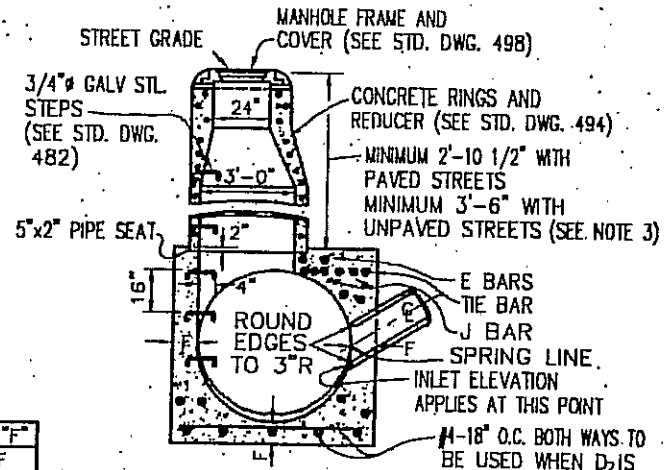

SECTION A—A

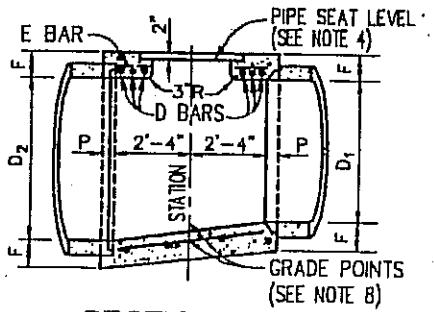

SECTION B—B

TABLE OF VALUES FOR "F"			
*D_2 D_1	F	*D_2 D_1	F
36"	6 1/2"	78"	11 3/4"
39"	7"	84"	12 1/2"
42"	7 1/2"	90"	13 1/4"
45"	7 3/4"	96"	14"
48"	8"	102"	15 1/2"
51"	8 1/2"	108"	16"
54"	9"	114"	16 1/2"
57"	9 1/4"	120"	17"
60"	9 1/2"	126"	17"
63"	10"	132"	17 1/2"
66"	10 1/4"	138"	17 1/2"
69"	10 3/4"	144"	18"
72"	11"		

* USE D_2 OR D_1, WHICHEVER IS GREATER

NOTES:

1– TABLE OF VALUES FOR "F" ARE ON THIS PLAN.

2– CENTER OF MANHOLE SHAFT SHALL BE LOCATED OVER CENTERLINE OF STORM DRAIN WHEN DIAMETER D_1 IS 48" OR LESS, IN WHICH CASE PLACE E BARS SYMMETRICALLY AROUND SHAFT AT 45° WITH CENTERLINE AND OMIT J BARS.

3– DETAIL M: WHEN DEPTH OF MANHOLE FROM STREET GRADE TO TOP OF BOX IS LESS THAN 2'-10 1/2" FOR PAVED STREETS OR 3'-6" FOR UNPAVED STREETS, CONSTRUCT MONOLITHIC SHAFT PER DETAIL M. SHAFT FOR ANY DEPTH OF MANHOLE MAY BE CONSTRUCTED PER DETAIL M. WHEN DIAMETER D_1 IS 48" OR LESS, CENTER OF SHAFT MAY BE LOCATED PER NOTE 2.

4– THICKNESS OF DECK SHALL VARY WHEN NECESSARY TO PROVIDE LEVEL PIPE SEAT BUT SHALL NOT BE LESS THAN TABULAR VALUES FOR F SHOWN ON THIS PLAN.

5– REINFORCING STEEL TO BE ROUND, DEFORMED BARS, 1-1/2" CLEAR FROM INSIDE FACE OF CONCRETE UNLESS OTHERWISE SHOWN.

6– STEPS SHALL 3/4" ROUND, GALVANIZED STEEL AND ANCHORED NOT LESS THAN 4" IN THE WALL OF STRUCTURE. UNLESS OTHERWISE SHOWN, THE SPACING SHALL BE 16". THE LOWEST STEP SHALL NOT BE MORE THAN 2'-0" ABOVE THE INVERT. SEE STD. DWG. 482.

7– RINGS, REDUCER AND PIPE FOR ACCESS SHAFT SHALL BE SEATED IN MORTAR AND NEATLY POINTED OR WIPED INSIDE THE SHAFT.

8– STATIONS OF MANHOLES SHOWN ON PLAN APPLY AT CENTER OF SHAFT. ELEVATIONS SHOWN AT STATIONS REFER TO PROLONGED INVERT GRADE LINES.

9– FLOOR OF MANHOLE SHALL BE STEEL-TROWELED TO SPRING LINE.

10– BODY OF MANHOLE SHALL BE POURED IN ONE CONTINUOUS OPERATION EXCEPT THAT A CONSTRUCTION JOINT WITH A LONGITUDINAL KEYWAY MAY BE PLACED AT THE SPRING LINE.

11– LENGTH L AND EMBEDMENT P SHALL HAVE THE FOLLOWING VALUES UNLESS OTHERWISE SHOWN ON PLAN:
FOR D_2=96" OR LESS, L=5'-6", P=5"
D_2 OVER 96", L=6'-0", P=8"
L MAY BE INCREASED OR LOCATION OF MANHOLE SHIFTED TO MEET PIPE ENDS. WHEN L GREATER THAN THAT SHOWN ABOVE IS SPECIFIED, D BARS SHALL BE CONTINUED 6" O.C.

12– D BARS SHALL BE #4 FOR D_2=39" OR LESS, #5 FOR D_2=42" TO 84" INCLUSIVE AND #6 FOR D_2=90" OR OVER. TIE BARS SHALL BE #3 BARS.

13– STRUCTURAL CONCRETE SHALL BE CLASS "A".

14– CENTERLINE OF INLET PIPE TO INTERSECT INSIDE FACE OF CONE AT SPRING LINE UNLESS OTHERWISE SHOWN.

15– WHERE PRESSURE MANHOLE NO. 2 IS SPECIFIED ON PLANS, SEE STD. DWG. 495 AND NOTE 3.

REGISTERED PROFESSIONAL ENGINEER
ROBERT K. HOLT
No. 27943
EXPIRES 03-31-98
CIVIL
STATE OF CALIFORNIA

APPROVED:

APPROVED: TOWN ENGINEER

R.C.E. 27943

DATE

REVISION	BY	DATE

Town of Yucca Valley

STORM DRAIN
MANHOLE No. 2

STANDARD DRAWING NO. 491

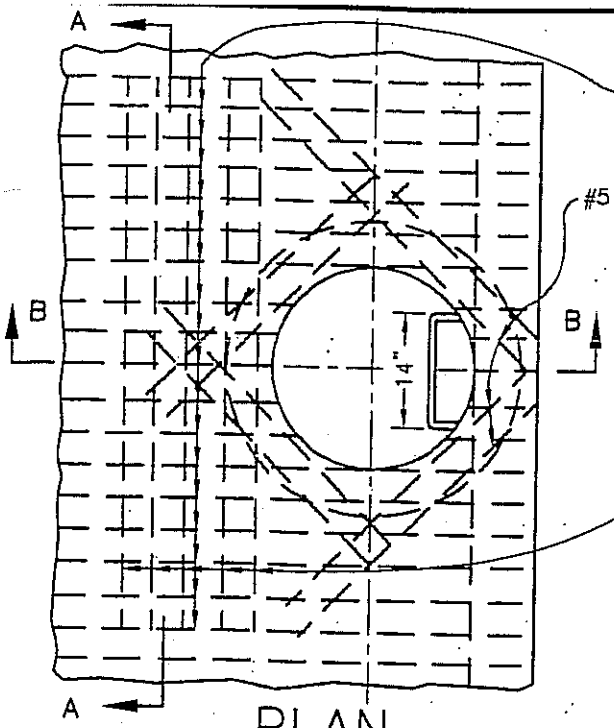

PLAN
(SHAFT NOT SHOWN)

SIZE AND SPACING OF STEEL AS SHOWN ON IMPROVEMENT PLAN, EXCEPT THAT 5 BARS ON EACH SIDE OF SHAFT SHALL BE NOT SMALLER THAN #5 @ 4" O.C. OR EQUIVALENT.

#5 BARS 5' LONG @ 4" C.C.

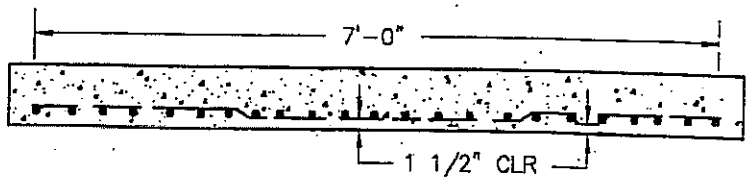

SECTION A-A

5 BARS 7' LONG 4" O.C. OF SIZE SHOWN FOR TRANSVERSE STEEL ON IMPROVEMENT PLAN EXCEPT NOT LESS THAN #5. WARP THESE BARS UNDER BARS THAT HAVE BEEN CUT FOR SHAFT OPENING

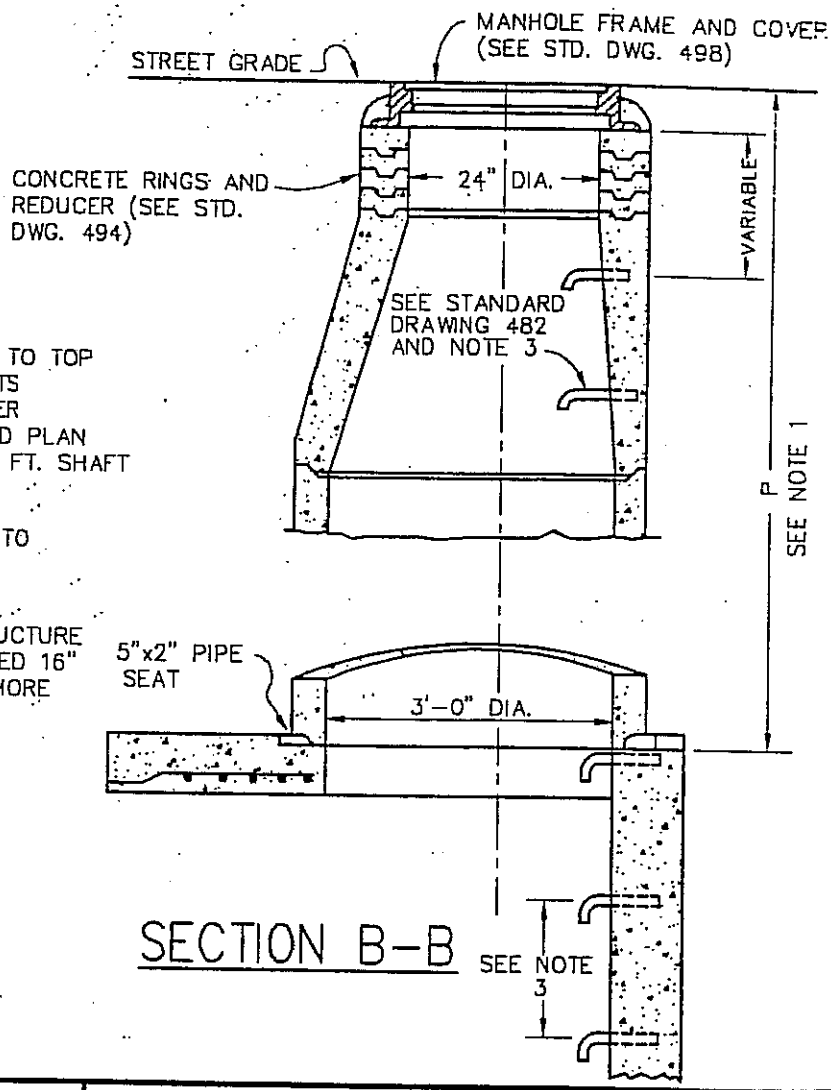

SECTION B-B

NOTE:

1- DEPTH P: WHEN DEPTH P FROM STREET GRADE TO TOP OF PIPE SEAT IS LESS THAN 2'-10 1/2" IN PAVED STREETS OR 3'-6" IN UNPAVED STREETS, CONSTRUCT 2 FT. DIAMETER SHAFT USING CONCRETE RINGS AS PER STANDARD PLAN FOR CONCRETE RINGS, OTHERWISE, CONSTRUCT 3 FT. SHAFT AS SHOWN ON THIS PLAN.

2- STATIONS SHOWN ON IMPROVEMENT PLAN REFER TO CENTERLINE OF SHAFT.

3- STEPS SHALL BE 3/4" ROUND GALVANIZED STEEL ANCHORED NOT LESS THAN 4" IN WALLS OF STRUCTURE AND UNLESS OTHERWISE SHOWN, SHALL BE SPACED 16" ON CENTER. THE LOWEST STEP SHALL NOT BE MORE THAN 2 FEET ABOVE THE FLOOR.

REGISTERED PROFESSIONAL ENGINEER
ROBERT K. HOLT
No.27943
EXPIRES 03-31-98
CIVIL
STATE OF CALIFORNIA

APPROVED:

DATE

APPROVED: TOWN ENGINEER
Robert K. Holt
R.C.E. 27943

REVISION	BY	DATE

Town of Yucca Valley

STORM DRAIN
MANHOLE NO. 3

STANDARD DRAWING NO. 492

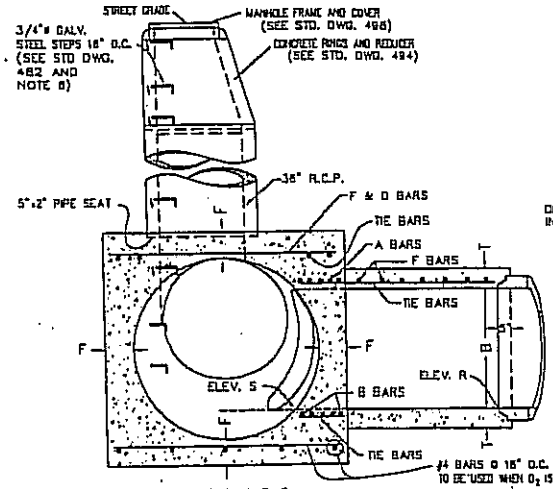

SECTION N-N-P-O
PROJECTED P-P-O

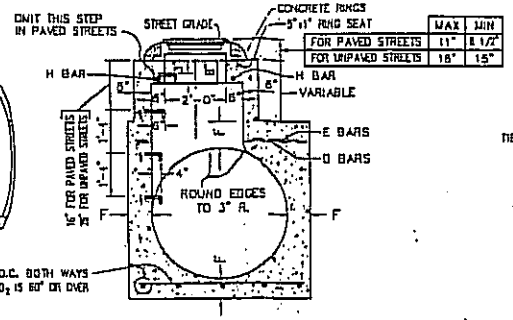

	MAX	MIN
FOR PAVED STREETS	11"	8 1/2"
FOR UNPAVED STREETS	18"	15"

DETAIL M
(SEE NOTE 5)

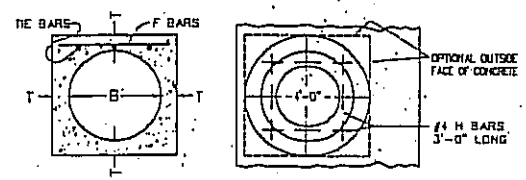

SECTION G-G

PLAN
(RINGS AND COVER NOT SHOWN)

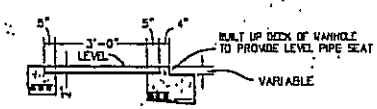

SEAT FOR SHAFT WHEN TOP IS NOT LEVEL

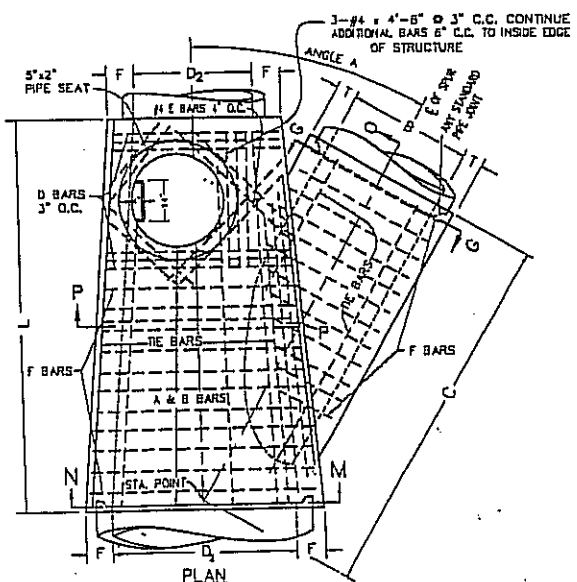

PLAN
(SHAFT NOT SHOWN)

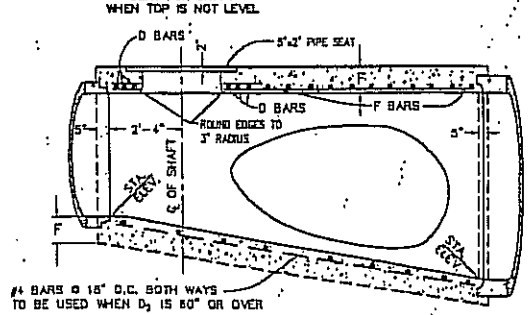

LONGITUDINAL SECTION

TABLE OF BAR SIZES		
* D_2, D_1 OR B	A & B BARS	D & F BARS
12" - 39"	NO. 5 @ 3"	NO. 4 @ 6"
42" - 84"	NO. 6 @ 3"	NO. 5 @ 6"
90" - 144"	NO. 7 @ 3"	NO. 6 @ 6"

*USE D_2 OR D_1, WHICHEVER IS GREATER, OR B.

REGISTERED PROFESSIONAL ENGINEER ROBERT K. HOLT No. 27943 EXPIRES 03-31-98 CIVIL STATE OF CALIFORNIA

APPROVED: _____ DATE _____

APPROVED: TOWN ENGINEER Robert K. Holt R.C.E. 27943

REVISION	BY	DATE

Town of Yucca Valley

STORM DRAIN
MANHOLE NO. 4

STANDARD DRAWING NO. 493

NOTES

1– VALUES FOR A, B, C, D_1, D_2, ELEV. R AND ELEV. S ARE SHOWN ON THE IMPROVEMENT PLANS. TABLE OF VALUES FOR F AND T HEREON.

2– LATERALS: IF LATERALS ENTER ON BOTH SIDES OF MANHOLE, ACCESS SHAFT SHALL BE LOCATED ON SIDE RECEIVING THE SMALLER LATERAL.

3– CENTER OF MANHOLE SHAFT SHALL BE LOCATED OVER CENTERLINE OF MAIN STORM DRAIN WHEN D_1 IS 48" OR LESS, IN WHICH CASE PLACE 8 E BARS SYMMETRICALLY AROUND SHAFT AT 45° WITH CENTERLINE.

4– LENGTH L MAY BE INCREASED AT OPTION OF CONTRACTOR TO MEET PIPE ENDS, BUT ANY CHANGE IN LOCATION OF SPUR MUST BE APPROVED BY THE ENGINEER.

5– DETAIL M: WHEN DEPTH OF MANHOLE FROM STREET GRADE TO TOP OF BOX IS LESS THAN 2'-10 1/2" FOR PAVED STREETS OR 3'-6" FOR UNPAVED STREETS, CONSTRUCT MONOLITHIC SHAFT PER DETAIL M.
THE CONTRACTOR SHALL HAVE THE OPTION OF CONSTRUCTING SHAFT AS PER DETAIL M FOR ANY DEPTH OF MANHOLE.
WHEN DIAMETER D_1 IS 48" OR LESS, CENTER OF SHAFT SHALL BE LOCATED PER NOTE 3.

6– REINFORCING STEEL SHALL BE ROUND, DEFORMED, STRAIGHT BARS, 1 1/2" CLEAR FROM INSIDE FACE UNLESS OTHERWISE SHOWN. TIE BARS SHALL BE NO. 4 AND SPACED 18" ON CENTERS OR CLOSER.

7– CONCRETE SHALL BE CLASS "A".

8– STEPS SHALL BE 3/4" GALVANIZED STEEL AND ANCHORED NOT LESS THAN 4" IN WALLS OF STRUCTURE. UNLESS OTHERWISE SHOWN THE SPACING SHALL BE 16" ON CENTER. THE LOWEST STEP SHALL BE NOT MORE THAN 2 FT. ABOVE THE INVERT.

9– RINGS, REDUCERS, AND PIPE FOR ACCESS SHAFT SHALL BE SEATED IN CEMENT MORTAR AND NEATLY POINTED OR WIPED INSIDE SHAFT.

10– FLOOR OF MANHOLE SHALL BE STEEL-TROWELED TO SPRING LINE.

11– BODY OF MANHOLE, INCLUDING SPUR, SHALL BE POURED IN ONE CONTINUOUS OPERATION, EXCEPT THAT THE CONTRACTOR SHALL HAVE THE OPTION OF PLACING AT THE SPRING LINE A CONSTRUCTION JOINT WITH LONGITUDINAL KEYWAY.

*USE D_1 OR D_2, WHICHEVER IS GREATER, OR B.

**
IF D_2, D_1, OR B FALLS BETWEEN TABULATED VALUES THEN USE THE NEXT HIGHEST VALUE TO DETERMINE F OR T.

** TABLE OF VALUES FOR F AND T

*D_1,D_2	F	B	T	B	T
12"	4"	12"	4"	78"	11 3/4"
15"	4 1/4"	15"	4 1/4"	84"	12 1/2"
18"	4 1/2"	18"	4 1/2"	90"	13 1/4"
21"	5"	21"	5"	96"	14"
24"	5 1/4"	24"	5 1/4"	102"	15 1/2"
27"	5 1/2"	27"	5 1/2"	108"	16"
30"	6"	30"	6"	114"	16 1/2"
33"	6 1/4"	33"	6 1/4"	120"	17"
36"	6 1/2"	36"	6 1/2"	126"	17"
39"	7"	39"	7"	132"	17 1/2"
42"	7 1/2"	42"	7 1/2"	138"	17 1/2"
45"	7 3/4"	45"	7 3/4"	144"	18"
48"	8"	48"	8"		
51"	8 1/2"	51"	8 1/2"		
54"	9"	54"	9"		
57"	9 1/4"	57"	9 1/4"		
60"	9 1/2"	60"	9 1/2"		
63"	10"	63"	10"		
66"	10 1/4"	66"	10 1/4"		
69"	10 3/4"	69"	10 3/4"		
72"	11"	72"	11"		
78"	11 3/4"				
84"	12 1/2"				
90"	13 1/4"				
96"	14"				
102"	15 1/2"				
108"	16"				
114"	16 1/2"				
120"	17"				
126"	17"				
132"	17 1/2"				
138"	17 1/2"				
144"	18"				

REGISTERED PROFESSIONAL ENGINEER
ROBERT K. HOLT
No.27943
EXPIRES
03-31-98
CIVIL
STATE OF CALIFORNIA

APPROVED:

DATE

APPROVED: TOWN ENGINEER
Robert K. Holt R.C.E. 27943

REVISION	BY	DATE

Town of Yucca Valley

STORM DRAIN
MANHOLE NO. 4

STANDARD DRAWING NO. 493A

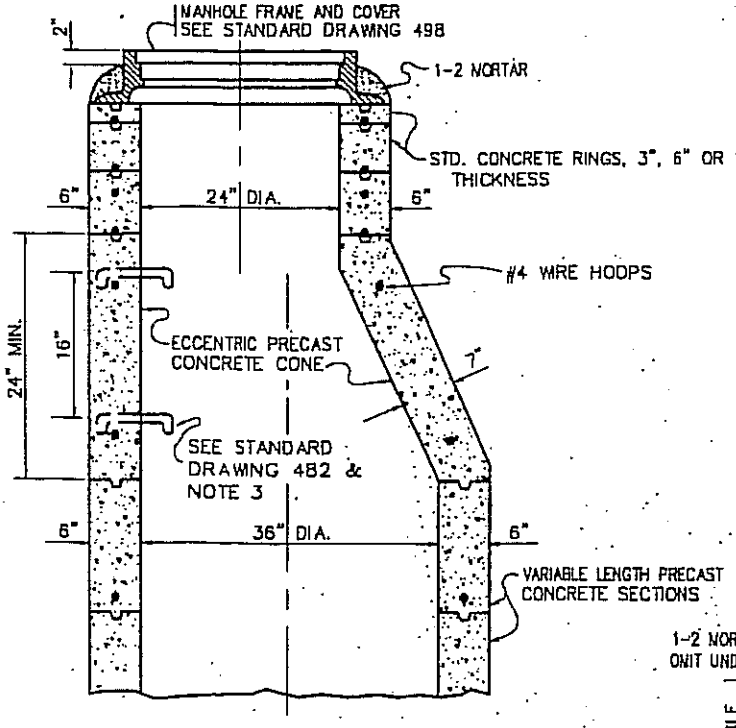

VERTICAL SECTION OF PLAIN CONCRETE ECCENTRIC MANHOLE SHAFT

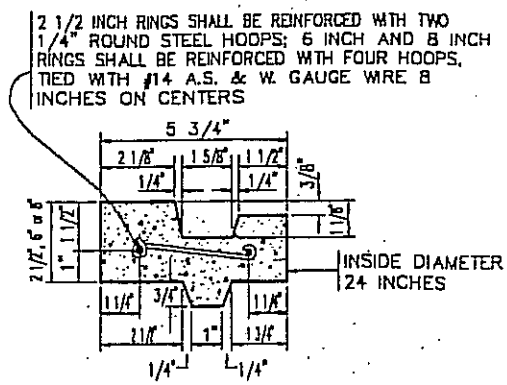

CROSS SECTION OF REINFORCED CONCRETE RING

NOTES:

1. ALL JOINTS SHALL BE FILLED WITH 1-2 MORTAR AND NEATLY POINTED OR WIPED INSIDE OF SHAFT.
2. COLLAR OF 1-2 MORTAR AROUND COVER FRAME SHALL BE OMITTED IN ROCK AND OIL STREETS AND IN PAVED STREETS.
3. STEPS SHALL BE 3/4 INCH ROUND GALVANIZED STEEL. TOP STEP SHALL BE PLACED DIRECTLY BENEATH THE MANHOLE COVER FRAME. WIDTH OF ALL STEPS SHALL BE 14 INCHES BETWEEN LEG CENTERS. EXCEPT WHERE SHOWN OTHERWISE, SPACING OF STEPS IN SHAFT SHALL BE 16 INCHES ON CENTER.
4. ECCENTRIC MANHOLE SHAFT, REDUCER, AND RINGS MAY BE PLAIN CONCRETE. FOR UNREINFORCED SECTIONS, THE MINIMUM THICKNESS SHALL BE 6 INCHES. THE CONCRETE USED SHALL BE CLASS "A".

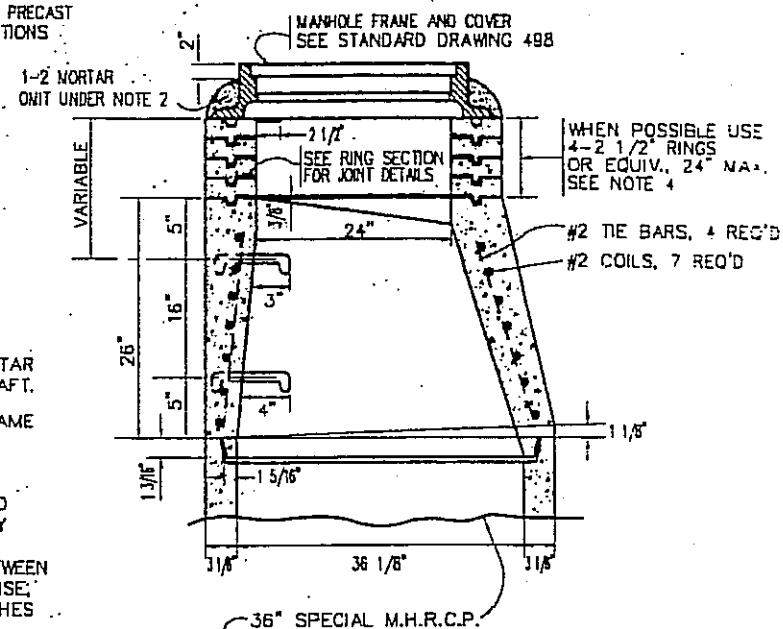

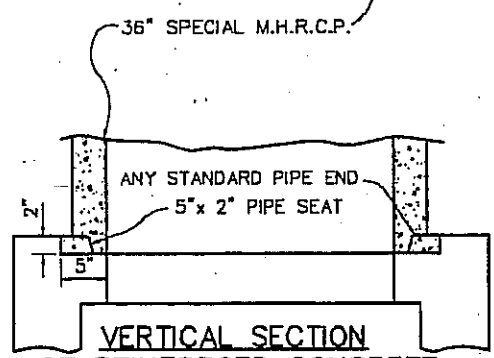

VERTICAL SECTION OF REINFORCED CONCRETE ECCENTRIC MANHOLE SHAFT

REGISTERED PROFESSIONAL ENGINEER
ROBERT K. HOLT
No.27943
EXPIRES 03-31-98
CIVIL
STATE OF CALIFORNIA

APPROVED: _____ DATE _____

APPROVED: TOWN ENGINEER Robert K. Holt R.C.E. 27943

REVISION	BY	DATE

Town of Yucca Valley

MANHOLE SHAFT FOR CAST PIPE

STANDARD DRAWING NO. 494

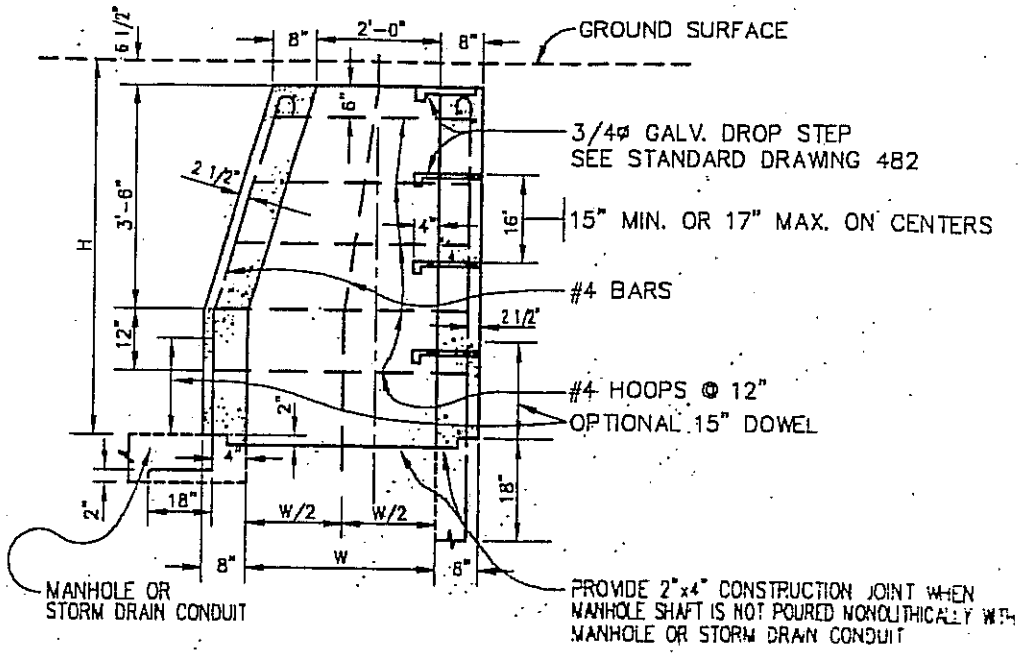

SECTION A-A

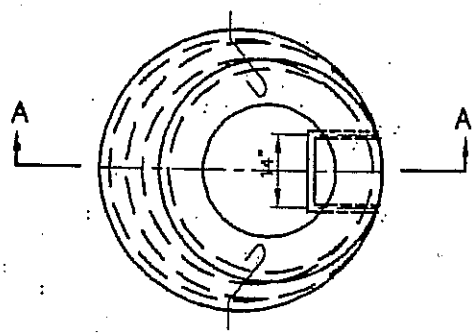

PLAN

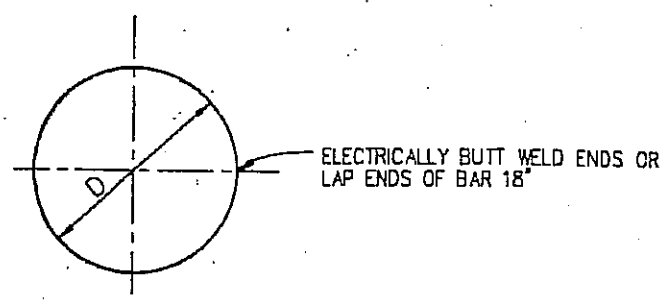

#4 HOOP BARS

WHERE H IS MORE THAN 4'-0", D=3'-1 3/4" FOR TOPMOST HOOP IN SHAFT; EACH LOWER HOOP IN SUCCESSION INCREASES 3 1/2" IN DIAMETER TO A MAXIMUM OF 4'-0" IN THE VERTICAL PORTION OF THE SHAFT.

NOTES:

1. IF "H" IS LESS THAN 1'-6", W=2'-0"
   IF "H" IS BETWEEN 1'-6" AND 2'-6", W=2'-6"
   IF "H" IS 2'-6" OR MORE, W=3'-0"
   IF "H" IS MORE THAN 4'-0 1/2", BRING WALLS VERTICALLY TO 4'-0 1/2" BELOW SURFACE AND TAPER FROM 3'-0" TO 2'-0" AS SHOWN.
2. THIS STRUCTURE SHALL BE USED WITH STANDARD PRESSURE MANHOLE FRAME AND COVER. SEE STD. DWG. 499. IT MAY BE USED FOR HYDROSTATIC HEADS UP TO 25' ABOVE THE STEEL PLATE.
3. CONCRETE SHALL BE CLASS "A".

REGISTERED PROFESSIONAL ENGINEER
ROBERT K. HOLT
No.27943
EXPIRES
03-31-98
CIVIL
STATE OF CALIFORNIA

APPROVED:

DATE

APPROVED: TOWN ENGINEER

Robert K. Holt

R.C.E. 27943

REVISION	BY	DATE

Town of Yucca Valley

STANDARD PRESSURE MANHOLE SHAFT

STANDARD DRAWING NO. 495

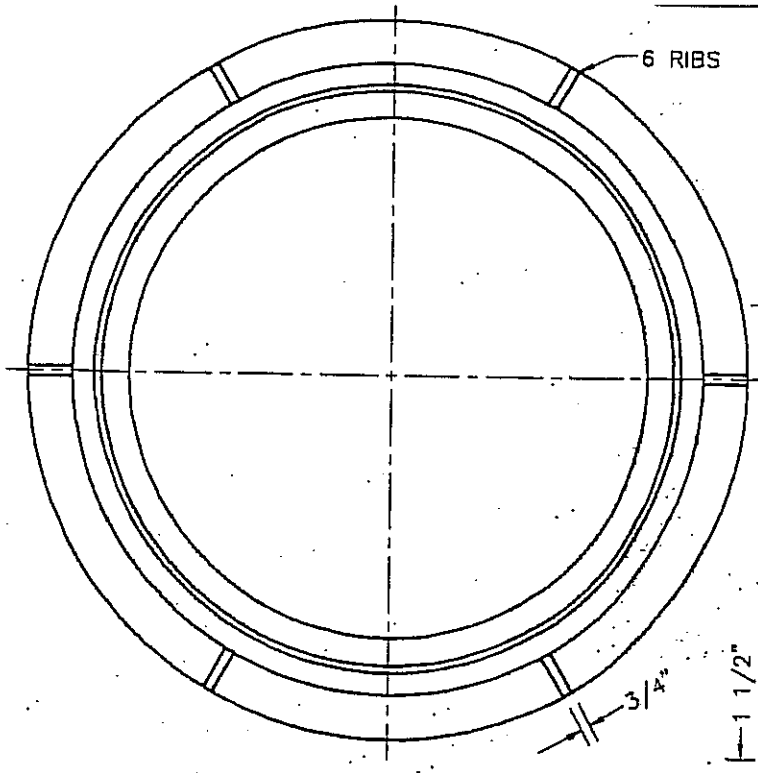

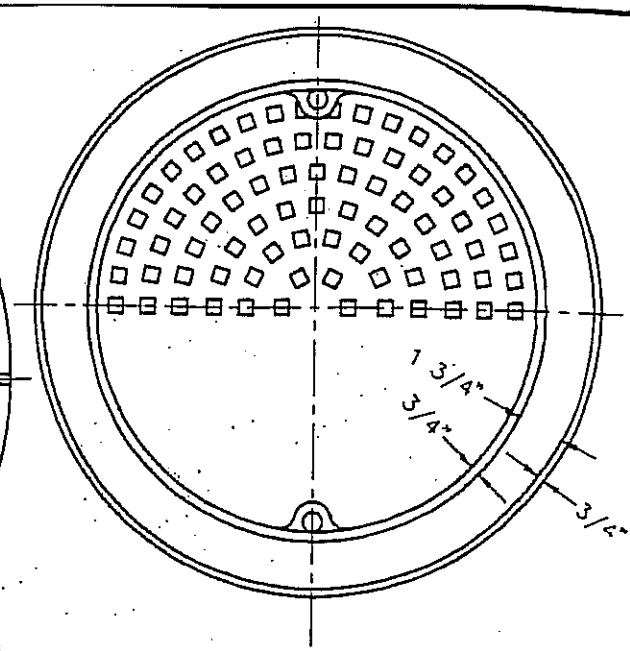

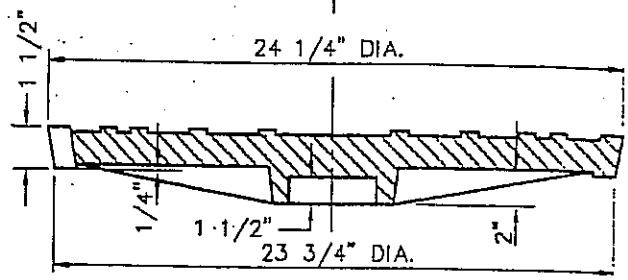

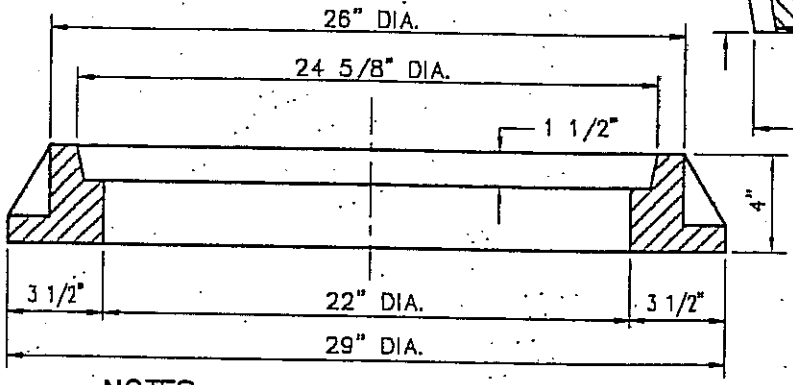

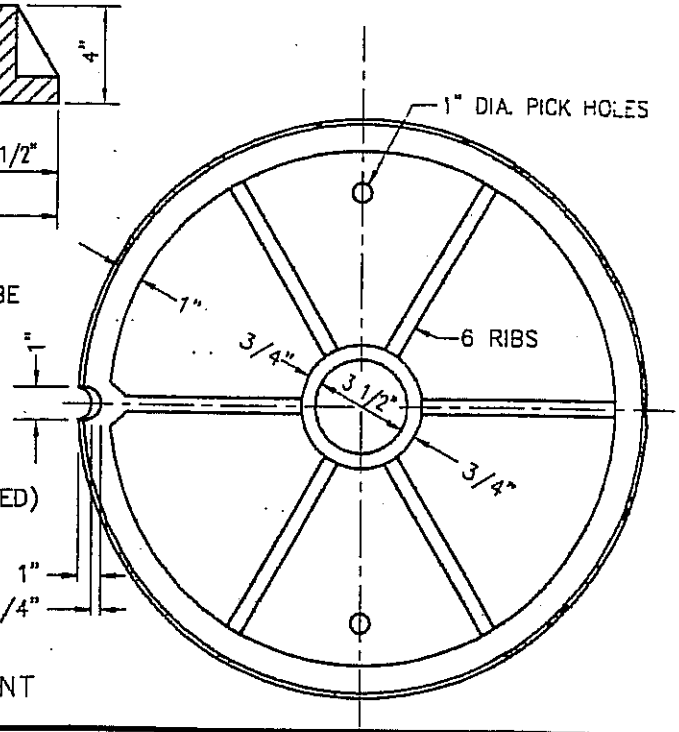

NOTES:

1. SEATS OF FRAME AND COVER SHALL BE MACHINED TO PREVENT NOISE
2. TOTAL WEIGHT OF FRAME AND COVER APPROX. 380 LBS.
3. MINIMUM CLEAR OPENING 22" DIA. ALL OTHER DIMENSIONS ARE NOMINAL

MATERIAL: CAST IRON (ASPHALT COATED)

REGISTERED PROFESSIONAL ENGINEER
ROBERT K. HOLT
No.27943
EXPIRES
03-31-98
CIVIL
STATE OF CALIFORNIA

ALHAMBRA A-1310 OR EQUIVALENT

APPROVED: _____ DATE _____

APPROVED: TOWN ENGINEER Robert K. Holt R.C.E. 27943

REVISION	BY	DATE

Town of Yucca Valley

MANHOLE FRAME & COVER – ROADWAY

STANDARD DRAWING NO. 496

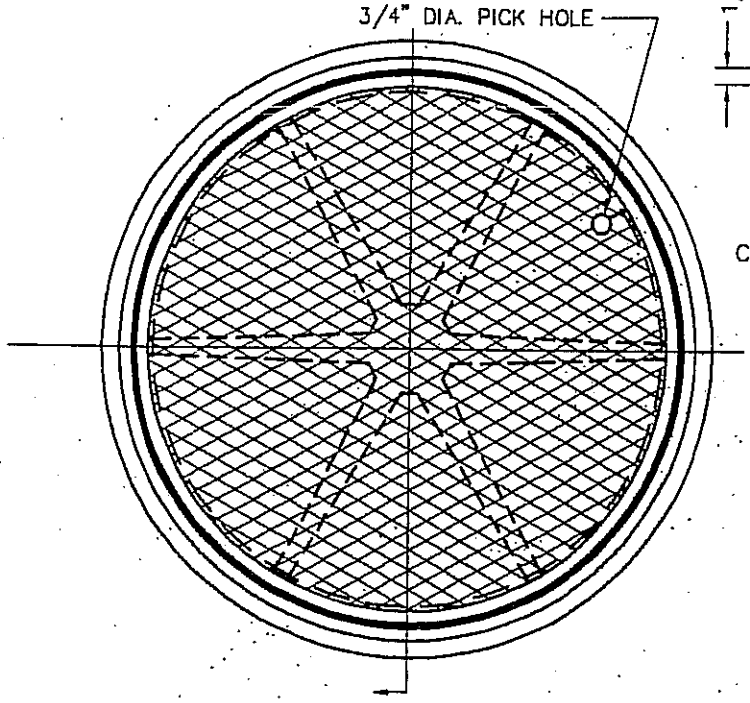

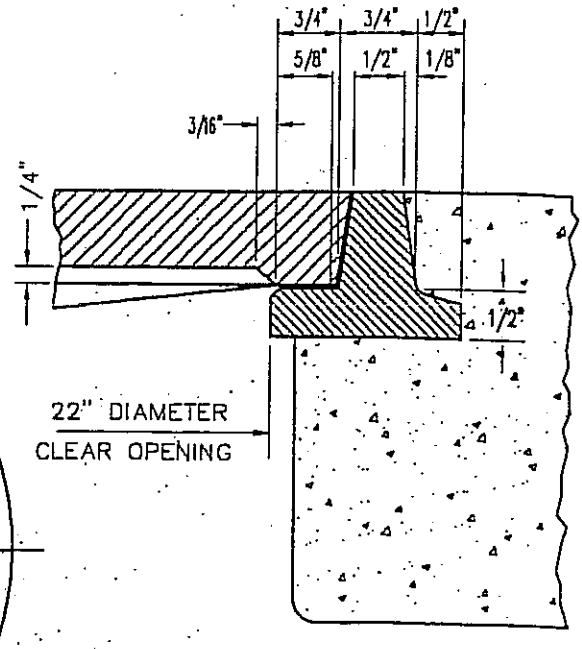

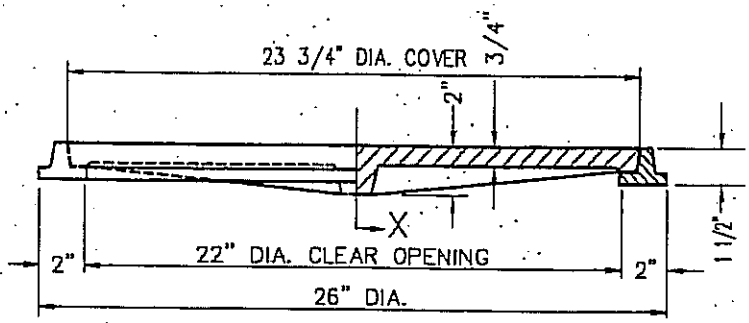

MATERIAL: CAST IRON (ASPHALT COATED OR GALVANIZED)

REGISTERED PROFESSIONAL ENGINEER
ROBERT K. HOLT
No.27943
EXPIRES
03-31-98
CIVIL
STATE OF CALIFORNIA

NOTES:

1. SEATS OF FRAME AND COVER SHALL BE MACHINED TO PREVENT NOISE.
2. TOTAL WEIGHT OF FRAME AND COVER APPROX. 130 LBS.
3. MINIMUM CLEAR OPENING 22" DIAMETER. ALL OTHER DIMENSIONS ARE NOMINAL.

ALHAMBRA A-1530 OR EQUIVALENT

APPROVED: _____ DATE _____

APPROVED: TOWN ENGINEER Robert K. Holt R.C.E. 27943

REVISION	BY	DATE

Town of Yucca Valley

MANHOLE FRAME & COVER – PARKWAY

STANDARD DRAWING NO. 497

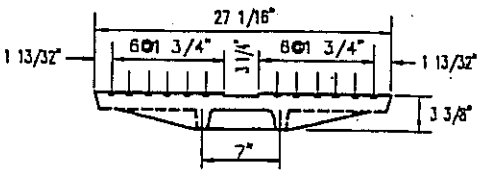

SECTION OF COVER

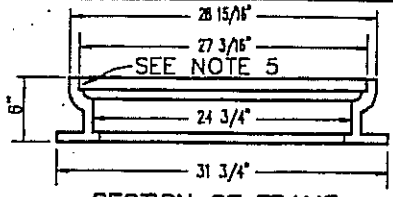

SECTION OF FRAME

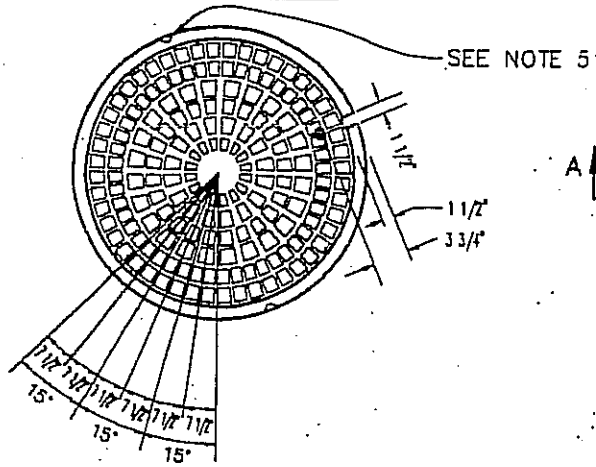

TOP PLAN OF COVER
WEIGHT=262 LBS.

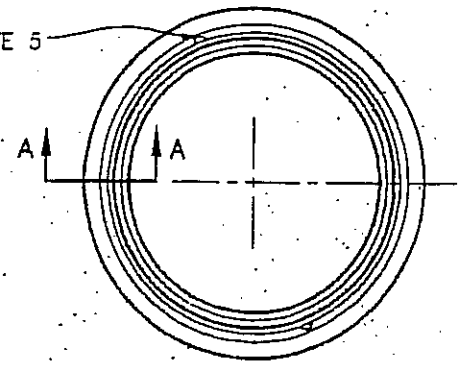

PLAN OF FRAME
WEIGHT=196 LBS.

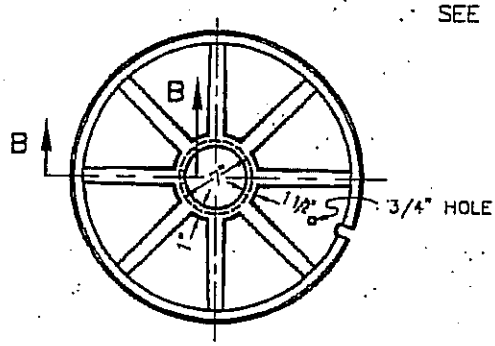

BOTTOM PLAN OF COVER

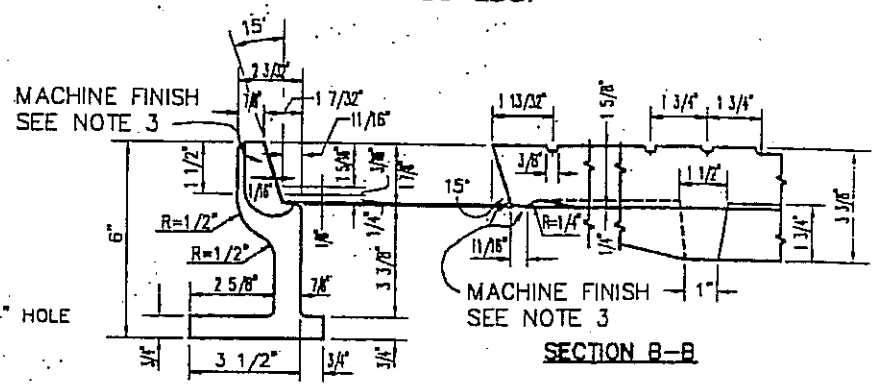

SECTION A–A

SECTION B–B

NOTES:

1. MANHOLE FRAME AND COVER SHALL BE MADE OF GRAY CAST IRON CONFORMING TO THE LATEST A.S.T.M. STANDARD A48, CLASS 30 OR BETTER.
2. ALL PARTS OF THE MANHOLE FRAME AND COVER EXCEPT MACHINED SURFACES SHALL BE COATED WITH ASPHALTUM PAINT.
3. MANHOLE FRAME AND COVER SHALL BE TESTED FOR ACCURACY OF FIT AND SHALL BE MARKED IN SETS BEFORE DELIVERY. THE COVER SHALL FIT THE FRAME SNUGLY BUT NOT TIGHTLY.
4. THE WEIGHTS OF THE FRANE AND COVER SHALL NOT VARY MORE THAN TWO PERCENT FROM THOSE GIVEN HEREON.
5. COVERS FOR MANHOLES LOCATED IN RIGHT OF WAY, EASEMENTS, ALLEYS, PARKWAYS, AND ALL OTHER PLACES EXCEPT PAVED STREETS SHALL BE PROVIDED WITH ALLEN SOCKET SET SCREW LOCKING DEVICES. THE CONTRACTOR SHALL DRILL AND TAP TWO HOLES TO A DEPTH OF 1" AT 90° TO PICK HOLE AND INSTALL 3/4"x3/4" ALLEN SOCKET SET SCREWS THEREIN.

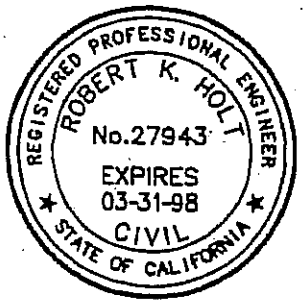

APPROVED: _____ DATE _____

APPROVED: TOWN ENGINEER Robert K. Holt R.C.E. 27943

REVISION	BY	DATE

Town of Yucca Valley

MANHOLE FRAME & COVER
NON–ROCKING

STANDARD DRAWING NO. 498

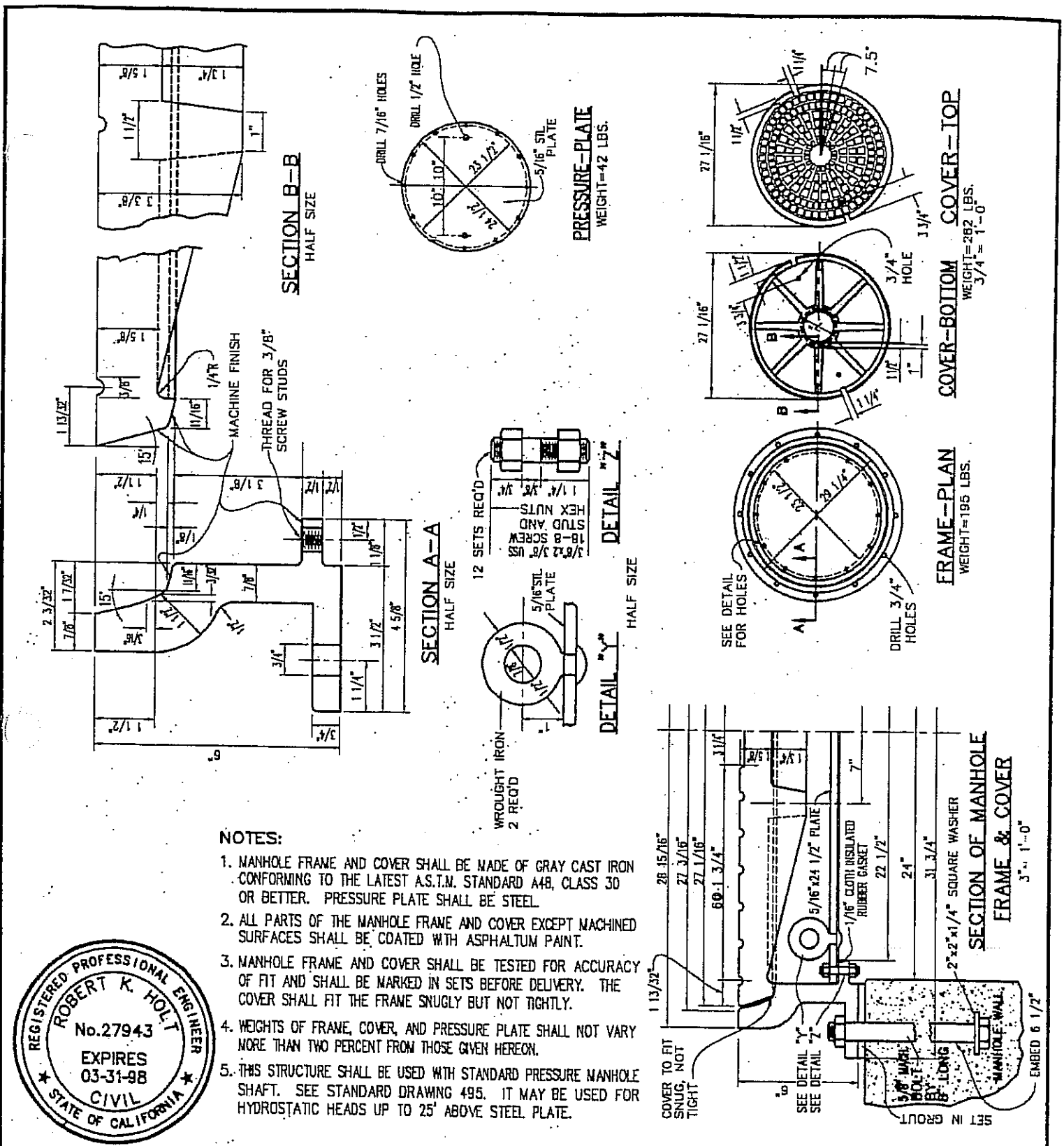

NOTES:

1. MANHOLE FRAME AND COVER SHALL BE MADE OF GRAY CAST IRON CONFORMING TO THE LATEST A.S.T.M. STANDARD A48, CLASS 30 OR BETTER. PRESSURE PLATE SHALL BE STEEL.
2. ALL PARTS OF THE MANHOLE FRAME AND COVER EXCEPT MACHINED SURFACES SHALL BE COATED WITH ASPHALTUM PAINT.
3. MANHOLE FRAME AND COVER SHALL BE TESTED FOR ACCURACY OF FIT AND SHALL BE MARKED IN SETS BEFORE DELIVERY. THE COVER SHALL FIT THE FRAME SNUGLY BUT NOT TIGHTLY.
4. WEIGHTS OF FRAME, COVER, AND PRESSURE PLATE SHALL NOT VARY MORE THAN TWO PERCENT FROM THOSE GIVEN HEREON.
5. THIS STRUCTURE SHALL BE USED WITH STANDARD PRESSURE MANHOLE SHAFT. SEE STANDARD DRAWING 495. IT MAY BE USED FOR HYDROSTATIC HEADS UP TO 25' ABOVE STEEL PLATE.

REGISTERED PROFESSIONAL ENGINEER
ROBERT K. HOLT
No.27943
EXPIRES 03-31-98
CIVIL
STATE OF CALIFORNIA

APPROVED: _____ DATE _____

APPROVED: TOWN ENGINEER Robert K. Holt R.C.E. 27943

REVISION	BY	DATE

Town of Yucca Valley

MANHOLE FRAME & COVER
PRESSURE TYPE

STANDARD DRAWING NO. 499